Daimler

SPARES DIVISION

SPARE PARTS CATALOGUE

for

DAIMLER MAJESTIC MAJOR

Saloon and Limousine

Price

£1 . 15s . 0d.

PUBLICATION NO. D3

ISSUED JULY, 1963

BY APPOINTMENT
TO H.M. QUEEN ELIZABETH THE QUEEN MOTHER
MOTOR CAR MANUFACTURERS
THE DAIMLER COMPANY LIMITED

Daimler

SPARES DIVISION

MAJESTIC MAJOR

SALOON AND LIMOUSINE

(DQ.450/1) **(DR.450/1)**

SPARE PARTS CATALOGUE

ENGINE NUMBERS

DQ.450/1	93003 ONWARDS
DR.450/1	93327 ONWARDS

CHASSIS NUMBERS

DQ.450	RIGHT-HAND DRIVE	136711 TO 136890 136916 TO 137687
DQ.451	LEFT-HAND DRIVE	136891 TO 136915
DR.450	RIGHT-HAND DRIVE	136011 ONWARDS
DR.451	LEFT-HAND DRIVE	136011 ONWARDS

THE DAIMLER COMPANY LIMITED, COVENTRY, ENGLAND

Telephone:
Coventry 27626

Telegraphic Address:
Daimler 'Phone Coventry

INTERPRETATION OF CATALOGUE

Attention is drawn to the lay-out of this catalogue. It will be observed that the heading of each assembly is printed in **BOLD BLOCK LETTERS,** whilst the spares relevant to each assembly are **printed in small type and inset to the right.**

The fact that certain items (printed in small type) are not " inset " indicates that they do not form part of any assembly and must, therefore, be ordered as individual items.

ILLUSTRATIONS

To aid identification of spares, " exploded " illustrations are incorporated in this catalogue.

These illustrations may be used in the following manner :—

(a) If a Crankshaft is required, the index shows that the details for the item are printed on page 2 and that it is illustrated on Plate 1. Turning to page 2, the necessary information for the ordering of the part is given, whilst the column headed " Plate No." indicates that reference to item number 35 on Plate 1 will give a photographic view of the component required.

(b) The details for each illustrated item are printed in the script in numerical Plate number order. An item may therefore be first identified photographically. For example, if Friction Pads are required for the Front Brake, a picture of the part may be found on Plate No. 18, together with the Plate reference number. It is now an easy matter to find Plate number " 18-2 " in the script and the Part No. and Technical Description are at once apparent.

ORDERING

Customers are advised to make themselves familiar with the method of ordering spare parts in accordance with the explanatory notes which follow.

Coloured paper is used for certain sections of this Catalogue to denote items which are peculiar to individual models.

PINK PAPER DENOTES ITEMS FOR DQ MODELS ONLY
YELLOW PAPER DENOTES ITEMS FOR DR MODELS ONLY
WHITE PAPER DENOTES ITEMS FOR DQ AND DR MODELS

PUBLICATION D.3. PRICE £1 15s. 0d. PUBLISHED JULY, 1963.

INSTRUCTIONS FOR ORDERING SPARE PARTS

To avoid delay through inaccurate interpretation, IT IS OF GREAT IMPORTANCE that the information detailed in the following paragraphs be strictly adhered to when placing orders.

CAR TYPE

Always quote the engine and chassis numbers except when Stock Orders are placed, in which case the Year and Model must be indicated.

An order for spares in connection with an Automatic Transmission Unit must be accompanied by the **Transmission Serial Number.** If it is desired to replace the Converter Assembly, however, the order for this component must bear the **Serial Number of the Converter,** which will be found stamped on the engine side of the Flywheel, adjacent to the Starter Ring Gear.

DETAILS OF PARTS REQUIRED

When ordering, the most complete information should be given to enable us to deal with your requirements expeditiously and to minimise delay in the despatch of the goods. Therefore we strongly recommend that the following procedure be adopted:—

(1) Identify part with technical description in catalogue.

(2) On Order, quote (a) part number, (b) technical description.

Note : In no case should the illustration plate number be given.

(3) If doubt exists as to the part number or technical description, a dimensioned sketch will assist in the interpretation of the order, or, alternatively, the old part should accompany the order as a pattern. When patterns are sent, it is most important that they be labelled, indicating the name and address of the sender, together with any reference such as order number, etc. Patterns will not be returned unless instructions to that effect accompany the order. In the absence of such instructions, patterns will be scrapped after retention for a period of ONE WEEK.

(4) To order in " sets " is misleading. Please, therefore, **state the specific quantity required.**

SPECIAL ATTENTION

Particular attention is drawn to the fact that when such items as Wings, Doors, Door Glasses, etc., are required, care should be taken to indicate whether they are located on the left-hand or right-hand side of the car. The position is determined by the driver's own left or right hand when seated in the car.

Orders for Carpets, Casings, etc., should clearly state the precise colour required.

DESPATCH INSTRUCTIONS

The full address of the destination to which the goods are to be sent, together with that of the customer, should be clearly defined.

Whilst every effort will be made to observe customers' wishes as to the mode of transport, it is the normal custom to utilize the quickest possible method, whether it be post, passenger train or road transport, this being dependent upon the size and weight of the package and the destination to which it is to be sent.

PRICES

Current retail prices, shown in the Daimler Parts Master Price List, are subject to alteration without notice, and are for delivery at Works. Postage, carriage and packing will be charged extra.

DAMAGE BY FIRE OR ACCIDENT

Whilst every precaution is taken, we do not accept liability for damage which may be caused by fire to any motor car or part thereof entrusted to us for any purpose whatsoever. Nor is liability accepted for accidental damage.

INDEX TO SECTIONS

DESCRIPTION OF SECTIONS	DQ.450/1 PAGE No.	DR.450/1 PAGE No.	PLATE Nos.
ACCELERATOR CONTROLS	25—28	25—28	8
AIR SILENCER	22	22	7
AUTOMATIC TRANSMISSION	31—41	31—41	9—10—11—12
AUTOMATIC TRANSMISSION MOUNTING DETAILS	46	46	13
BODY FITTINGS (DQ.450/1)	147—176	—	—
BODY FITTINGS (DR.450/1)	—	177—212	—
BODY PANELS	141—146	141—146	—
BODY SHELL (DQ.450/1)	137	—	—
BODY SHELL (DR.450/1)	—	139	—
BRAKE CONTROLS AND HYDRAULICS	74—80	74—80	20
BRAKE VACUUM SERVO	83—84	83—84	21
CARBURETTERS	19—20	19—20	6
CHASSIS	130—134	130—134	31
COOLING SYSTEM	119—120	119—120	28
CYLINDER BLOCK	1—4	1—4	1
CYLINDER HEADS	12—16	12—16	5
ELECTRICAL EQUIPMENT	214—233	214—233	32—33
EXHAUST SYSTEM	123—124	123—124	29
FRONT BRAKES	67—68	67—68	18
FRONT SUSPENSION	61—64	61—64	17
FUEL SYSTEM	126—128	126—128	30
GEAR SELECTOR CONTROL	113—116	113—116	27
HANDBRAKE CONTROLS	86—92	86—92	22
HEATER AND DEMISTER (DQ.450/1)	238—240	—	34
HEATER AND DEMISTER (DR.450/1)	—	244—248	35
OIL CLEANER	8	8	3
OIL PUMP	6	6	2
OIL PUMP (HYDROSTEER)	109—110	109—110	26
PROPELLER SHAFTS	49—50	49—50	14
REAR AXLE (1st COND)	53—54	53—54	15
REAR AXLE (2nd COND)	57—58	57—58	16
REAR BRAKES	70—72	70—72	19
RESERVOIR ASSEMBLY (HYDROSTEER)	105—106	105—106	25
ROAD WHEELS	66	66	—
STEERING UNIT AND LINKAGE (MANUAL) ...	94—96	94—96	23
STEERING UNIT, LINKAGE AND HYDRAULIC RAM (HYDROSTEER)	99—102	99—102	24
TOOL KIT	259	259	—
WATER PUMP	10	10	4
WINDSCREEN WASHER	252	252—256	36—37

INDEX TO PARTS

Description	Model DQ.450/1	Model DR.450/1	
A	Page No.	Page No.	Plate
'A' Post Capping	155	185	—
'A' Post Panel Assembly	144	144	—
Accelerator Controls Hand Throttle Lever Assembly	26	26	8
Accelerator Control Rods	25—28	25—28	8
Accelerator Controls Support Tube Shaft	25—26	25—26	8
Accelerator Pedal	25	25	8
Accelerator Pedal Bracket	25	25	8
Accelerator Pedal Draught Excluder	25	25	8
Air Silencer	22	22	7
Air Silencer Bowl Assembly ...	22	22	7
Air Silencer Bowl Gasket ...	22	22	7
Air Silencer Bowl Support Bracket	22	22	—
Air Silencer Element	22	22	7
Air Silencer Pipes	22	22	7
Air Silencer Pipe Gaskets	22	22	7
Ammeter	223	223	33
Ammeter Bulb	223	223	—
Ashtray (Division)	—	189	—
Ashtray (Front Facia)	155	184	—
Ashtray (Front Seat Squab) ...	153	—	—
Ashtray (Rear Quarters)	—	191	—
Automatic Transmission Brake Bands	33	33	9
Automatic Transmission Brake Band Adjusting Screws	33	33	9
Automatic Transmission Brake Band Struts	33	33	9
Automatic Transmission Case ...	31	31	9
Automatic Transmission Collector Ring	34	34	10
Automatic Transmission Converter and Relay Valve Assembly	37	37	11
Automatic Transmission Converter Shuttle Valves	37	37	11
Automatic Transmission Detent Cam	39	39	12
Automatic Transmission Extension Case Assembly	38	38	12
Automatic Transmission Extension Valve and Fork	38	38	12
Automatic Transmission First Clutch Friction Discs	35	35	10
Automatic Transmission First Clutch Plates	35	35	10
Automatic Transmission First Clutch Piston	35	35	10
Automatic Transmission First Clutch Retractor Plate	35	35	10
Automatic Transmission First Clutch Retractor Springs	35	35	10
Automatic Transmission Forward Gear Free Wheel Unit	36	36	10
Automatic Transmission Front Planetary Carrier	35	35	10
Automatic Transmission Front Planetary Carrier Thrust Washer	35	35	10
Automatic Transmission Front Pump	34	34	10
Automatic Transmission Front Pump and Collector Ring	34	34	10
Automatic Transmission Front Pump Seal	34	34	10
Automatic Transmission Front Pump 'O' Rings	34	34	10
Automatic Transmission Front Pump Thrust Washer	34	34	10
Automatic Transmission Front Ring Gear	36	36	10
Automatic Transmission Front Ring Gear Piston Ring	36	36	10
Automatic Transmission Front Sun Gear Assembly	35	35	10
Automatic Transmission Front Sun Gear Piston Seal	35	35	10
Automatic Transmission Governor Assembly	39	39	12
Automatic Transmission Governor Control Detent Piston	38	38	12
Automatic Transmission Governor Drive Gear (on Mainshaft)	36	36	10

Description	Model DQ.450/1	Model DR.450/1	
A—*continued*	Page No.	Page No.	Plate
Automatic Transmission Governor Return Spring	39	39	12
Automatic Transmission Governor Shaft	39	39	12
Automatic Transmission Intermediate Speed Hold Bellows	40	40	12
Automatic Transmission Intermediate Speed Hold Solenoid	41	41	12
Automatic Transmission Intermediate Speed Hold Spring	40	40	12
Automatic Transmission Low Band Lock-up Piston	33	33	9
Automatic Transmission Low/Forward Band Servo Cylinder	33	33	9
Automatic Transmission Low Band Servo Plate	33	33	9
Automatic Transmission Low Band Servo Plate Gaskets	33	33	9
Automatic Transmission Mainshaft...	34	34	10
Automatic Transmission Mainshaft Piston Ring	34	34	10
Automatic Transmission Manifold Plate	37	37	11
Automatic Transmission Multi-Disc Clutch Repair Kit	41	41	—
Automatic Transmission Oil Filter...	38	38	11
Automatic Transmission Oil Sump...	38	38	11
Automatic Transmission Overhaul Gaskets Set	41	41	—
Automatic Transmission Overhaul Seals Kit	41	41	—
Automatic Transmission Parking Brake Piston	39	39	12
Automatic Transmission Parking Brake Rod	32	32	9
Automatic Transmission Parking Pawl and Toggle	39	39	12
Automatic Transmission Planetary Gear Retainer	35	35	10
Automatic Transmission Pressure Test Plugs	31—40	31—40	—
Automatic Transmission Rear Planetary Carrier	35	35	10
Automatic Transmission Rear Planetary Carrier Piston Ring	35	35	10
Automatic Transmission Rear Pump Assembly	40	40	—
Automatic Transmission Rear Pump Cover	40	40	12
Automatic Transmission Rear Pump Gaskets	40	40	12
Automatic Transmission Rear Pump Gears	40	40	12
Automatic Transmission Rear Ring Gear	35	35	10
Automatic Transmission Rear Ring Gear 'O' Ring	35	35	10
Automatic Transmission Rear Ring Gear Piston Ring	35	35	10
Automatic Transmission Rear Sun Gear	35	35	10
Automatic Transmission Rear Sun Gear Retainer	35	35	10
Automatic Transmission Rear Sun Gear Thrust Washer	35	35	10
Automatic Transmission Relief Valve Body Assembly	37	37	11
Automatic Transmission Reverse Gear Free Wheel Unit	36	36	10
Automatic Transmission Reverse Lever Stop Plate	39	39	12
Automatic Transmission Reverse Servo Cylinder	32	32	9
Automatic Transmission Reverse Servo Plate	32	32	9
Automatic Transmission Reverse Servo Plate Gaskets	32	32	9
Automatic Transmission Selector Control Seal	31	31	—

INDEX TO PARTS

Description	Model DQ.450/1 Page No.	Model DR.450/1 Page No.	Plate
A—*continued*			
Automatic Transmission Selector Lever	31	31	9
Automatic Transmission Servo Pistons	32	32	9
Automatic Transmission Servo Piston Seals	32	32	9
Automatic Transmission Speedometer Drive Gear	40	40	12
Automatic Transmission Speedometer Drive Gear Housing	39	39	12
Automatic Transmission Speedometer Gear Housing Gaskets	39	39	12
Automatic Transmission Speedometer Driven Gear	40	40	12
Automatic Transmission Sun Gear Thrust Washers	35	35	10
Automatic Transmission Thrust Washer Kit	41	41	—
Automatic Transmission Toggle Arm Lever	31	31	9
Automatic Transmission Torque Converter	31	31	—
Automatic Transmission Torque Converter Housing	46	46	13
Automatic Transmission Torque Converter Housing Covers	46	46	13
Automatic Transmission Universal Joint Flange	36	36	10
Automatic Transmission Valve Block Assembly	37	37	—
B			
Backlight Finisher Joint Covers ...	159	192	—
Backlight Glass	159	192	—
Backlight Glass Finishers	159	192	—
Backlight Glass Seal	159	192	—
Backlight Rubber Filler Strip ...	159	192	—
Battery	228	228	—
Battery Box Cover Assembly ...	161	194	—
Battery Box Lid Assembly	161	195	—
Battery Cables	229	229	—
Battery Cradle Assembly	161	194	—
Battery Cradle Rubbers	161	194	—
Battery Retaining Angle Assembly...	161	194	—
Battery Rod	161	194	—
'B/C' Post Assembly	145	145	—
'B/C' Post Capping	156	—	—
'B/C' Post Filler (Division) ...	—	188	—
'B/C' Post Trim Panel	154	188	—
'B/C' Post Trim Panel (Division)	—	188	—
Blower Unit	239	244	34—35
Body Mountings	176	211	—
Body Mounting Bolts	176	211	—
Body Mounting Pads	176	211	—
Body Mounting Washers	176	211	—
Body Shell	137	139	—
Bonnet Assembly	143	143	—
Bonnet Chrome Motif	162	196	—
Bonnet Chrome Mouldings ...	163	196	—
Bonnet 'D' Motif	162	196	—
Bonnet Hinges	148	178	—
Bonnet Lock Control Cable Assembly	149	179	—
Bonnet Lock Control Cable Handle	149	179	—
Bonnet Lock Striker Assembly ...	148	178	—
Bonnet Lock Striker Plates	149	179	—
Bonnet Lock Striker Springs ...	149	179	—
Bonnet Lock Striker Support Plate	148	179	—
Bonnet Rubber Buffers	149	179	—
Bonnet Rubber Seal	148	178	—
Bonnet Safety Catch	149	179	—
Boot Light	221	221	32
Boot Light Bulb	221	221	—
Boot Light Lens	221	221	—
Boot Light Mercury Switch ...	221	221	32
Brake Fluid Level/Handbrake Warning Light	226	226	32
Brake Fluid Low Pressure Pipes ...	74	74	20
Brake Fluid Supply Tank	74	74	20
B—*continued*			
Brake Fluid Supply Tank Clip ...	74	74	20
Brake Fluid Supply Tank Switch and Cap	226	226	33
Brake Hydraulic Pipe Connectors ...	77—79	77—79	20
Brake Hydraulic Pipe Tee Piece ...	80	80	20
Brake Hydraulic Pipe 3-Way Unions	78	78	20
Brake Master Cylinder	74	74	20
Brake Master Cylinder Jaw ...	74	74	20
Brake Master Cylinder Repair Kit	74	74	—
Brake Pedal	75	75	20
Brake Pedal Cover	75	75	20
Brake Pedal and Master Cylinder Mounting Bracket	75	75	20
Brake Pedal Return Spring ...	75	75	20
Brake Pedal Shaft Bush	75	75	—
Brake Servo Air Cleaner	75	75	20
Brake Servo Air Cleaner Hose and Pipes	75	75	20
Brake Servo Air Control Valve Repair Kit	84	84	—
Brake Servo Bracket	84	84	—
Brake Servo Hoses	75—76	75—76	20
Brake Servo Hose Banjo	76	76	20
Brake Servo Main Cylinder Repair Kit	84	84	—
Brake Servo Non-Return Valve ...	76	76	20
Brake Servo Non-Return Valve Gasket	76	76	20
Brake Servo Slave Cylinder Repair Kit	84	84	—
Brake Servo Unit	83	83	20
Breather Hoses	22	22	7
Bulkhead Assembly	144	144	—
C			
Camshaft	1	1	1
Camshaft Bearings	1	1	1
Camshaft Chain Wheel	1	1	1
Cantrail Cappings	156	185	—
Carburetter Float	19	19	6
Carburetter Float Chamber ...	19	19	6
Carburetter Float Chamber Lid ...	19	19	6
Carburetter Insulating Piece ...	20	20	6
Carburetter Jet Assembly	19	19	6
Carburetter Jet Bearing	19	19	6
Carburetter Jet Housing	19	19	6
Carburetter Jet Needle	19	19	6
Carburetter Mixture Lever Ball End	20	20	6
Carburetter Needle and Seat ...	19	19	6
Carburetter Overflow Pipes ...	19	19	6
Carburetter Suction Chamber ...	19	19	6
Carburetter Suction Chamber Damper	19	19	6
Carpets	173	209	—
Carpets (Non-Felted)	175	—	—
Carpet Retainers	173—174	209	—
Chain Cover Plate Assembly ...	3	3	1
Chain Tensioner	1	1	1
Chain Vibration Damper	2	2	1
Chassis Frame Assembly	130	130	31
Chassis Frame Front Cross Member Bottom Plate	131	131	31
Chassis Frame Front Engine Mounting	131	131	31
Chassis Frame Front Engine Mounting Bracket	131	131	31
Chassis Frame Front Shock Absorber	133	133	31
Chassis Frame Front Shock Absorber Brackets	134	134	31
Chassis Frame Front Suspension Bumpstop	132	132	31
Chassis Frame Gearbox Cone Rubber Mountings	132	132	31
Chassis Frame Gearbox Support Member	131	131	31
Chassis Frame Rear Axle Bumpstop	132	132	31
Chassis Frame Rear Axle Intermediate Bumpstop	132	132	—

INDEX TO PARTS

Description	Model DQ.450/1 Page No.	Model DR.450/1 Page No.	Plate
C—*continued*			
Chassis Frame Rear Axle Nosepiece Bumpstop	132	132	31
Chassis Frame Rear Shock Absorbers	134	134	31
Chassis Frame Rear Spring Assembly	133	133	31
Chassis Frame Rear Spring Bracket	133	133	31
Chassis Frame Rear Spring Eye Bolt	133	133	31
Chassis Frame Rear Spring Shackle Assembly	133	133	31
Chassis Frame Rebound Stop Rubber Assembly	132	132	31
Chassis Frame Selector Bell Crank Lever Support Bracket	131	131	31
Chassis Frame Steering Lockstop ...	133	133	31
Chassis Frame Steering Box Bracket	131	131	31
Cigar Lighters	225	225	33
Clips	233	233	—
Clock	223	223	33
Connecting Rods	3	3	1
Connecting Rod Bearings	3	3	1
Connecting Rod Gudgeon Pins ...	3	3	1
Control Box	217	217	32
Control Box Cover	217	217	—
Control Box Resistance	217	217	—
Courtesy Light Switches	227	227	33
Crankshaft	2	2	1
Crankshaft Chain Wheel	2	2	1
Crankshaft Chain Wheel Key ...	2	2	1
Crankshaft Damper and Pulley ...	2	2	—
Crankshaft—Oil Seals	2	2	1
Crankshaft Pulley	2	2	1
Crankshaft Thrust Washers ...	2	2	1
Cubby Box Lid Lock	155	184	—
Cylinder Block	1	1	1
Cylinder Block Drain Plugs ...	1	1	1
Cylinder Heads	12	12	5
Cylinder Head Gaskets	12	12	5
Cylinder Head Studs...	1	1	1
Cylinder Head Top Covers ...	15	15	5
Cylinder Head Top Cover Gaskets	15	15	5
D			
'D' Post Capping	157	186	—
'D' Post Chrome Finishers ...	—	198	—
'D' Post Lower Assembly ...	145	146	—
'D' Post Upper Assembly ...	145	146	—
Demister Control Cable	239	248	34—35
Demister Control Indicator Stud ...	240	248	34—35
Demister Ducts	240	246	34—35
Demister Hoses	240	246	34—35
Demister Operating Knob	240	248	34—35
Demister Rotary Control	239	247	34—35
Dipper Switch	227	227	33
Distributor	216	216	32
Distributor Cap	216	216	32
Distributor Cap Brush and Spring	216	216	32
Distributor Condenser	216	216	32
Distributor Contact Set	216	216	32
Distributor Rotor Arm	216	216	32
Distributor Suction Pipe	20	20	6
Distributor Vacuum Unit	216	216	32
Division Bottom Trim Panel ...	—	189	—
Division Front Top Rail Trim Panel	—	188	—
Division Glass	—	188	—
Division Glass Channels	—	189	—
Division Grab Handle	—	189	—
Division Rear Top Rail Trim Panels	—	188	—
Division Side Panels	—	187	—
Division Top Panel	—	187	—
Door Sills	144	145	—
Drip Moulding Chrome Finishers ...	—	198	—
Drip Moulding Chrome Finisher Joint Covers	—	199	—
Dynamo	214	214	32
Dynamo Adjusting Plate	215	215	32
Dynamo Armature	214	214	—
Dynamo Brushes	214	214	—
Dynamo Fan	215	215	32
D—*continued*			
Dynamo Field Coils	214	214	—
Dynamo Pulley	215	215	32
Dynamo Support Bracket	214	214	32
E			
Earth Cables	229	229	—
Electrical Cables	232	232	—
Electrical Harnesses	231—232	231—232	—
Exhaust Down and Intermediate Pipe Gasket	123	123	29
Exhaust Down Pipe	123	123	29
Exhaust Down Pipe Gasket ...	123	123	29
Exhaust Flexible Pipe	123	123	29
Exhaust Intermediate Pipe L.H. ...	123	123	29
Exhaust Manifolds	13	13	5
Exhaust Muffler	124	124	29
Exhaust Silencer and Tail Pipe Assembly	123	123	29
Exhaust System Rubber Mountings	124	124	29
Exhaust Tail Pipe Brackets ...	124	124	29
Exhaust Tail Pipe Mounting Straps	124	124	29
F			
Facia Panel Assembly	155	184	—
Fan Cowls	119	119	28
Flasher Unit	220	220	32
Fog Lamps	221	221	32
Fog Lamp Brackets	147	177	—
Fog Lamp Bulb	221	221	—
Fog Lamp Light Unit	221	221	32
Front Apron	143	143	—
Front Bench Seat Assembly ...	153	—	—
Front Brake Calipers	67	67	18
Front Brake Caliper Adaptor Plate	68	68	18
Front Brake Caliper Bleed Screw and Ball	67	67	18
Front Brake Caliper Bridge Pipe ...	67	67	18
Front Brake Caliper Shims ...	67	67	18
Front Brake Disc	68	68	18
Front Brake Friction Pad Kit ...	68	68	—
Front Brake Hose	78	78	20
Front Brake Piston and Cylinder Assembly	67	67	18
Front Brake Wheel Cylinder Repair Kit	67	67	—
Front Bumper Assembly	147	177	—
Front Bumper Bar	147	177	—
Front Bumper Brackets	147	177	—
Front Bumper Over-rider ...	147	177	—
Front Bumper Over-rider Moulding	147	177	—
Front Door Cappings	156	185	—
Front Door Casings	168	203	—
Front Door Casing Armrest ...	168	203	—
Front Door Check Arm	167	202	—
Front Door Check Arm Swivel Brackets	167	202	—
Front Door Chrome Mouldings ...	163	197	—
Front Door Draught Excluder ...	169	203—204	—
Front Door Fence Plates	168	203	—
Front Door Fully Trimmed ...	164	199	—
Front Door Glass Bottom Channel	165	201	—
Front Door Glass Bottom Channel Rubber Seal	165	202	—
Front Door Handles	165	200	—
Front Door Handle End Clip ...	165	200	—
Front Door Handle Locking Barrel	165	200	—
Front Door Hinges	167	202	—
Front Door Less Lock and Remote Control	164	199	—
Front Door Light Frames	165—166	200	—
Front Door Light Frame Draught Strip	166	201	—
Front Door Light Frame Glass ...	166	201	—
Front Door Lock and Remote Control	164	199	—

INDEX TO PARTS

Description	Model DQ.450/1 Page No.	Model DR.450/1 Page No.	Plate
F—*continued*			
Front Door Lock Strikers	165	199	—
Front Door No Draught Ventilator Frames	165—166	200	—
Front Door Pull Handles	168	203	—
Front Door Sealing Rubbers ...	168	203	—
Front Door Shell	143	143	—
Front Door Sill Tread Plates ...	169	204	—
Front Door Window Regulators ...	167	202	—
Front Door Window Regulator Handles	167	202	—
Front Door Window Regulator Handle Escutcheon	167	202	—
Front Flasher Lamps	219	219	32
Front Flasher Lamp Bulb	219	219	—
Front Flasher Lamp Lens ...	219	219	32
Front Flasher Lamp Rim	219	219	32
Front Hub Assembly...	64	64	17
Front Number Plate Support Plate	147	177	—
Front Seat Arm Rest	153	—	—
Front Seat Cushion	—	183	—
Front Seat Runners	153	183	—
Front Seat (Split-type) Assembly ...	154	183	—
Front Suspension Anti-Roll Bar Bushes	64	64	17
Front Suspension Anti-Roll Bar Sleeve (Rubber)	64	64	17
Front Suspension Anti-Roll Bar Spindle	64	64	17
Front Suspension Anti-Roll Bar Spindle Buffers	64	64	17
Front Suspension Bottom Transverse Links	61	61	17
Front Suspension Brake Caliper Adaptor Plate	63	63	17
Front Suspension Pedestal	61	61	17
Front Suspension Pedestal Adjuster	62	62	17
Front Suspension Pedestal Bearing Cover	61	61	17
Front Suspension Pedestal Bearing (Metalastic)	61	61	17
Front Suspension Pedestal Shims ...	61	61	17
Front Suspension Shock Absorbers	64	64	17
Front Suspension Shock Absorber Rubber Buffers	64	64	—
Front Suspension Shock Absorber Rubber Bushes	64	64	—
Front Suspension Springs	61	61	17
Front Suspension Spring Sandwich Ring	61	61	17
Front Suspension Spring Seating ...	61	61	17
Front Suspension Steering Arm ...	63	63	17
Front Suspension Swivel Axle ...	62	62	17
Front Suspension Swivel Axle Oil Seals	63	63	17
Front Suspension Swivel Pin ...	63	63	17
Front Suspension Swivel Pin Needle Roller	63	63	17
Front Suspension Swivel Pin Oil Seal	63	63	17
Front Suspension Swivel Pin Sealing Ring	63	63	17
Front Suspension Top Transverse Link	62	62	—
Front Suspension Top Transverse Link Bush	62	62	17
Front Suspension Top Transverse Link Oil Retainer	62	62	17
Front Suspension Torque Link ...	62	62	17
Front Wings	141	141	—
Front Wing Make-up Piece ...	141	141	—
Front Wing Mudshield	141	141	—
Front Wing Mudshield Strut ...	142	142	—
Front Wing Sealing Plate	142	142	—
Front Wing Sidelamp Cowl... ...	143	143	—
Front Wing Support	142	142	—
Front Wing Valances	141	141	—
Front Wing Valance Rubber Seal ...	141	141	—
Fuse Box	217	217	32
Fuse Box Cover	218	218	—
Fuse Box Fuse, 35 amp.	217	217	—

Description	Model DQ.450/1 Page No.	Model DR.450/1 Page No.	Plate
G			
Gear Selector Control Contact Adjuster	114	114	27
Gear Selector Control Bell-Crank Levers	115	115	27
Gear Selector Control Bell-Crank Lever Supports	115	115	27
Gear Selector Control Hand Lever	113	113	27
Gear Selector Control Quadrant ...	113	113	27
Gear Selector Control Quadrant Cover	113	113	27
Gear Selector Control Reverse Light Switch	114	114	27
Gear Selector Control Rods ...	115—116	115—116	27
Gear Selector Control Steering Column Support Clamp	114	114	27
Gear Selector Control Tube Assembly	113	113	27
Gear Selector Control Tube Bottom Bracket	114	114	27
Gearbox Support Plate	3	3	1
H			
Handbrake Bell-Crank Levers ...	90—91	90—91	22
Handbrake Bell-Crank Lever Return Spring	91	91	22
Handbrake Bell-Crank Lever Swivels	90	90	22
Handbrake Cable Abutment Bracket	86	86	22
Handbrake Cable Assembly... ...	87	87	22
Handbrake Connecting Rods ...	87—92	87—92	22
Handbrake Idler Levers	88—89	88—89	22
Handbrake Lever Assembly... ...	86	86	22
Handbrake Lever Attachment Plate	152	182	—
Handbrake Lever Mounting Bracket	86	86	22
Handbrake Lever Pawl	86	86	—
Handbrake Mechanism	71	71	19
Handbrake Mechanism Repair Kit	71	71	—
Handbrake Mechanism Retraction Plate	71	71	19
Handbrake Operating Lever Assembly	87	87	22
Handbrake Pad Carriers	71	71	19
Handbrake Pad Carrier Bolt ...	71	71	19
Handbrake Rear Brake Link ...	90	90	22
Handbrake Warning Light Switch	226	226	33
Headlamps	218—219	218—219	32
Headlamp Bulb	218—219	218—219	—
Headlamp Dipper Switch	227	227	33
Headlamp Light Unit	218—219	218—219	32
Headlamp Outer Rim	218—219	218—219	32
Heater Control Cable	239	248	31—35
Heater Deflector Assembly ...	239	244	34—35
Heater Hoses	238—240	245—247	34—35
Heater Operating Knob	239—240	248	34—35
Heater Radiator	238	244	34—35
Heater (Rear) Air Duct Grilles ...	—	247	35
Heater (Rear Compartment) Air Duct	—	247	35
Heater (Rear) Hoses	—	246—247	35
Heater (Rear) Isolating Tap ...	—	245	35
Heater (Rear) Isolating Tap Bracket	—	245	35
Heater (Rear) Motor	—	244	35
Heater (Rear) Motor Rubber Cover	—	244	35
Heater (Rear) Rear Quarter Switches	—	248	35
Heater (Rear) Rotor	—	244	35
Heater Rotary Control	239	247	34—35
Heater Rotary Control Indicator Stud	240	248	34—35
Heater Switch	240	248	34—35
Heater Unit	238	244	34—35
Heater Unit (Rear)	—	244	35
Heater Water Control Valve ...	238	244	34—35
Heater Water Pipes	238—239	244—245	34—35
High Tension Leads	15	15	—
High Tension Lead Cover	16	16	—
Horns	231	231	33
Horn Contact...	100	100	—

INDEX TO PARTS

Description	Model DQ.450/1 Page No.	Model DR.450/1 Page No.	Plate
I			
Ignition Coil	216	216	32
Induction Manifold	13	13	5
Inside Handle Escutcheon (Front Doors)	165	200	—
Inside Handle Escutcheon (Rear Doors)	170	205	—
Inside Handle (Front Doors) ...	165	200	—
Inside Handle (Rear Doors) ...	170	205	—
Insulating Felts	174—175	210	—
Interior Light Lens and Bulb ...	221	221	—
Interior Lights (Rear Compartment)	221	221	32
Interior Light Switch (Rear Compartment)	227	227	33
Interior Mirror	151	181	—
Interior Roof Light (Front Compartment)	—	221	32
Interior Roof Light Switch (Front Compartment)	—	227	—
Intermediate Speed Hold Solenoid	228	228	33
Intermediate Speed Hold Switch ...	226	226	32
Intermediate Speed Hold Switch Escutcheon	226	226	32
K			
Kick-Down Control Rods	27—28	27—28	8
Kick-Down Control Vertical Shaft	28	28	8
Kick-Down Lever Assembly (Intermediate)	28	28	8
Kick-Down Lever Bracket (Intermediate)	28	28	8
L			
Light Leads (Speedo and Rev. Counter)	223	223	—
Long Range Driving Lamp	221—222	221—222	—
Long Range Driving Lamp Bulb ...	221—222	221—222	—
Long Range Driving Lamp Light Unit	221—222	221—222	32
Low Tension Cable (Coil to Distributor)	15	15	—
Luggage Floor Assembly	146	146	—
M			
Main Bearings...	2	2	1
Main Floor Assembly	144	144	—
Mixture Control	226	226	—
N			
No Draught Ventilator (Front Doors)	166	200	—
No Draught Ventilator (Rear Quarters)	158	191	—
No Draught Ventilator Catch (Rear Quarters)	158	191—192	—
No Draught Ventilator Index Sleeve (Front Doors)	—	201	—
No Draught Ventilator Locking Handle (Front Doors)	166	200	—
No Draught Ventilator Rubber Seals (Rear Quarters)	158	192	—
No Draught Ventilator Sealing Rubber (Front Doors)	166	201	—
No Draught Ventilator Upper Pivot (Front Doors)	—	201	—
O			
Occasional Seats	—	189	—
Occasional Seat Trim Panels ...	—	190	—
Oil Cleaner	8	8	3
Oil Cleaner Element	8	8	3
Oil Filler Cap	4	4	1
Oil Filler Tube Assembly	4	4	1
Oil Pressure Warning Light ...	223	223	32
Oil Pressure Warning Light Switch	8—228	8—228	3—33
Oil Pump	6	6	2
Oil Pump Cover	6	6	2
O—*continued*			
Oil Pump Drive Gear	6	6	2
Oil Pump Driven Gear	6	6	2
Oil Pump Spindle Assembly ...	6	6	2
Oil Relief Valve	6	6	2
Oil Strainer Assembly	6	6	2
Oil Sump	3	3	1
Oil Sump Bridge Piece	4	4	1
Oil Sump Dipstick	4	4	1
Oil Sump Drain Plug	3	3	1
Outside Handle (Front Doors) ...	165	200	—
Outside Handle (Rear Doors) ...	170	200	—
P			
Petrol Feed Unit (Petrol Reserve Valve)	126	126	30
Petrol Filler Cap Assembly	126	126	3
Petrol Filler Hose	126	126	30
Petrol Filter	128	128	30
Petrol Gauge	223	223	33
Petrol Pipes	127—128	127—128	30
Petrol Pipe Clips	127—128	127—128	30
Petrol Pump	127—217	127—217	30—32
Petrol Pump Armature Roller ...	217	217	—
Petrol Pump Diaphragm Assembly	217	217	—
Petrol Pump Filter	217	217	—
Petrol Pump Rocker and Blade Assembly	217	217	—
Petrol Reserve Switch	226	226	—
Petrol Reserve Switch Bulb... ...	226	226	—
Petrol Tank	126	126	30
Petrol Tank Gauge Unit	126—223	126—223	30—32
Petrol Tank Gauge Unit Sealing Washer	126	126	30
Petrol Tank Sealing Ring	162	195	—
Petrol Tank Straps	161	195	—
Petrol Tank Vent Hose	126	126	30
Pistons	3	3	1
Piston Rings	3	3	1
Plenum Chamber Grille	149	180	—
Plenum Chamber Lattice	150	180	—
Plenum Chamber Tube	150	180	—
Plinth behind Bumpers	—	177—196	—
Power Assisted Steering Hoses ...	105—106	105—106	25
Power Assisted Steering Hose Banjos	106	106	25
Power Assisted Steering Hose Clips	106	106	25
Power Assisted Steering Hydraulic Ram	102	102	24
Power Assisted Steering Hydraulic Ram Anchor Bracket	102	102	—
Power Assisted Steering Oil Pump	109	109	26
Power Assisted Steering Oil Pump 'O' Rings	109	109	26
Power Assisted Steering Oil Pump Pulley	110	110	26
Power Assisted Steering Oil Pump Pulley Belt	110	110	26
Power Assisted Steering Oil Pump Repair Kit	109	109	—
Power Assisted Steering Oil Pump Rotor	109	109	26
Power Assisted Steering Oil Pump Support Bracket	109	109	26
Power Assisted Steering Oil Reservoir	105	105	25
Power Assisted Steering Oil Reservoir Filter	105	105	25
Power Assisted Steering Oil Reservoir 'O' Rings	105	105	25
Power Assisted Steering Oil Reservoir Support Bracket	105	105	25
Power Assisted Steering Unit ...	99	99	24
Propeller Shaft Centre Bearing ...	49	49	14
Propeller Shaft Centre Bearing Grease Seal	49	49	—
Propeller Shaft Centre Bearing Support Bracket	49	50	14
Propeller Shaft Flange Yokes ...	49—50	49—50	14

INDEX TO PARTS

Description	Model DQ.450/1	Model DR.450/1	
P—*continued*	Page No.	Page No.	Plate
Propeller Shaft (Front)	49	49	14
Propeller Shaft Journals	49—50	49—50	14
Propeller Shaft (Rear)	50	50	14
Propeller Shaft Sleeve Yoke ...	50	50	14
Push Rod Assembly	13	13	5
R			
Radiator Block	119	119	28
Radiator Cradle Assembly	119	119	—
Radiator Drain Tap	119	119	28
Radiator Drain Tap Extension ...	119	119	28
Radiator Filler Cap	119	119	28
Radiator Grille Assembly	147	178	—
Radiator Grille Surround	147—148	178	—
Radiator Hoses	120	120	28
Radiator Mountings	120	120	28
Rear Apron	146	146	—
Rear Axle Companion Flange ...	53—57	53—57	15—16
Rear Axle Crown Wheel and Pinion	53—57	53—57	15—16
Rear Axle Differential Assembly ...	53—58	53—58	15—16
Rear Axle Differential Bearing ...	53—57	53—57	15—16
Rear Axle Differential Case... ...	53—58	53—58	15—16
Rear Axle Differential Shims ...	53—57	53—57	15—16
Rear Axle Differential Thrust Washer	53—58	53—58	15—16
Rear Axle Pinion Bearing	53—57	53—57	15—16
Rear Axle Pinion Mate Gears ...	53—58	53—58	15—16
Rear Axle Pinion Oil Seal	53—57	53—57	15—16
Rear Axle Pinion Shims	53—57	53—57	15—16
Rear Axle Shaft	54—58	54—58	15—16
Rear Axle Shaft Oil Seal	54—58	54—58	15—16
Rear Axle Side Gears	53—58	53—58	15—16
Rear Brake Calipers	70	70	19
Rear Brake Caliper Adaptor Plate	72	72	19
Rear Brake Caliper Bleed Screw and Ball	70	70	19
Rear Brake Caliper Bridge Pipe ...	70	70	19
Rear Brake Caliper Shims	70	70	—
Rear Brake Disc	72	72	19
Rear Brake Friction Pad Kit ...	71	71	—
Rear Brake Piston and Cylinder Assembly	70	70	19
Rear Brake Wheel Cylinder Repair Kit	71	71	—
Rear Bumper Assembly	162	195	—
Rear Bumper Bar	162	195	—
Rear Bumper Brackets	162	196	—
Rear Bumper Medallion	162	196	—
Rear Bumper Over-rider	162	195	—
Rear Bumper Over-rider Moulding	162	195	—
Rear Door Cappings	156—157	186	—
Rear Door Casing	172	208	—
Rear Door Check Arm	172	207	—
Rear Door Check Arm Swivel Brackets	172	207	—
Rear Door Chrome Mouldings ...	163—164	197—198	—
Rear Door Courtesy Light Switch Buffers	173	208	—
Rear Door Draught Excluder ...	173	208	—
Rear Door Fence Plates	173	208	—
Rear Door Fence Plate Buffers ...	173	—	—
Rear Door Fully Trimmed	169	204	—
Rear Door Handles	170	205	—
Rear Door Handle End Clip ...	170	205	—
Rear Door Handle Locking Barrel	—	205	—
Rear Door Hinges	171—172	207	—
Rear Door Hinge Tapped Plate ...	—	207	—
Rear Door Light Frame	170	205	—
Rear Door Light Frame Draught Strip	171	206	—
Rear Door Light Frame Glass ...	171	206	—
Rear Door Light Frame Glass Channel	171	206	—
Rear Door Light Frame Glass Channel Seal	171	206	—
Rear Door Light Frame Seal ...	170	205	—
Rear Door Lock and Remote Control	170	205	—
Rear Door Lock Striker	170	205	—
Rear Door Pull Bar	—	207	—
R—*continued*	Page No.	Page No.	Plate
Rear Door Pull Handles	172	—	—
Rear Door Sealing Rubbers ...	172	208	—
Rear Door Shell	144	144	—
Rear Door Sill Cappings	—	209	—
Rear Door Sill Finishers	—	209	—
Rear Door Sill Rubber Mat ...	—	208	—
Rear Door Sill Tread Plates... ...	173	—	—
Rear Door Window Regulator ...	171	206	—
Rear Door Window Regulator Escutcheon	171	206	—
Rear Door Window Regulator Handle	171	206	—
Rear Flasher Lamp	219—220	219—220	32
Rear Flasher Lamp Bulb	219—220	219—220	—
Rear Flasher Lamp Lens	219—220	219—220	32
Rear Hubs	54—58	54—58	15—16
Rear Hub Key	54—58	54—58	15—16
Rear Hub Oil Seal	54—58	54—58	15—16
Rear Hub Shims	58	58	16
Rear Number Plate Illumination Lamp	220	220	—
Rear Number Plate Illumination Lamp Bracket	160	194	—
Rear Number Plate Illumination Lamp Bulb	220	220	—
Rear Number Plate Illumination Lamp Cover	220	220	32
Rear Quarter Armrest	—	191	—
Rear Quarter Cappings	157	186—187	—
Rear Quarter Chrome Finishers ...	164	198	—
Rear Quarter Chrome Mouldings ...	—	198	—
Rear Quarter Pocket Assembly ...	—	191	—
Rear Quarter Trim Pad	158	—	—
Rear Quarter Trim Panels	—	191	—
Rear Seat Armrest	158	190	—
Rear Seat Cushion	157	190	—
Rear Seat Squab	157	190	—
Rear Wheel Arches	146	146	—
Reverse Lamp	220	220	—
Reverse Lamp Body	220	220	32
Reverse Lamp Bulb	220	220	—
Reverse Lamp Lens and Rim ...	220	220	32
Reverse Lamp Switch	228	228	33
Rev. Counter	222	222	32
Rev. Counter Drive Pinion ...	217	217	32
Rev. Counter Flexible Cable ...	222	222	32
Road Wheels	66	66	—
Road Wheels Inner Tubes	66	66	—
Road Wheels Outer Covers ...	66	66	—
Road Wheels Rimbellishers ...	66	66	—
Rocker Shaft Assembly	12—13	12—13	5
Rocker Shaft Brackets	13	13	5
Rocker Oil Feed Pipe Assembly ...	4	4	1
Roof Assembly	143	143	—
Roof Centre Bow	154	184	—
Roof Lining	154	184	—
Roof Listing Sticks	154	184	—
Rubber Grommets	232	232	—
Rug (Nylon)	174	—	—
S			
Sealing Rubbers	175	211	—
Scuttle Chrome Mouldings	163	197	—
Scuttle Side Casing	153	183	—
Scuttle Top Casings	153	183	—
Sidelamps	219	219	—
Sidelamp Bulb	219	219	—
Sidelamp, Indicator	149	179	—
Sidelamp Lens	219	219	32
Sidelamp Rim	219	219	32
Sidelamp Sealing Washer	149	179	32
Spare Wheel Cover	161	195	—
Spare Wheel Cover Turnbutton ...	161	195	—
Sparking Plugs	15	15	—
Sparking Plug Extension Assembly	16	16	—
Speedometer	222	222	32
Speedometer Flexible Cable ...	222	222	32
Starter Gear Ring	46	46	13

INDEX TO PARTS

Description	Model DQ.450/1 Page No.	Model DR.450/1 Page No.	Plate
S—*continued*			
Starter Ignition and Accessories Switch	224	224	32
Starter Jaw	3	3	1
Starter Motor	216	216	32
Starter Solenoid	216	216	32
Steering Box (Manual)	94	94	23
Steering Box (Power Assisted) ...	99	99	24
Steering Column Control Assembly	95	95	23
Steering Column Draught Excluder	94	94	23
Steering Column Draught Excluder Support Plate	95	95	—
Steering Column Stator Tube ...	95	95	23
Steering Column Stays	151—152	181—182	—
Steering Drag Link	96	96	23
Steering Drop Arm	94—99	94—99	23—24
Steering End Plate Oil Seal	94—99	94—99	23—24
Steering Inner Column	94—99	94—99	23—24
Steering Main Nut	94—99	94—99	23—24
Steering Oil Seal	94—99	94—99	23—24
Steering Pivot Lever	95—96	95—96	23
Steering Rocker Shaft	94—99	94—99	23—24
Steering Track Rod Assembly ...	96	96	23
Steering Whee lAssembly	95—100	95—100	23—24
Stop and Tail Lamps	220	220	—
Stop and Tail Lamp Bulb	220	220	—
Stop and Tail Lamp Bulb Holder ...	220	220	32
Stop and Tail Lamp Lens and Rim ...	220	220	32
Stop Lamp Switch	227	227	33
Suction Pipe Assembly	20	20	6
Sun Visors	151	181	—
Sun Visor Friction Pivot	—	181	—
Switches	224—228	224—228	33
Switch Bezel	224	224	32
Switch Designation Plates	225	225	—
Switch Solenoid Circuit Breaker ...	228	228	33
T			
Tappet Ball End	2	2	1
Tappet Block Assembly	2	2	1
Temperature Gauge	223	223	33
Temperature Transmitter	223	223	33
Thermostat	14	14	5
Throttle and Mixture Control Bracket	27	27	8
Throttle Control	226	226	—
Throttle Control Rods	25—27	25—27	8
Throttle Control Shaft Bracket ...	26	26	8
Throttle Control Shaft Return Spring	26	26	8
Throttle Control Tube Assembly ...	25	25	8
Tool Kit	259	259	—
Trunk Lid Assembly	146	146	—
Trunk Lid Buffers	159	193	—
Trunk Lid Hinges	159	193	—
Trunk Lid Lock Assembly	160	194	—
T—*continued*			
Trunk Lid Lock Striker Plate ...	160	194	—
Trunk Lid Locking Barrel	160	194	—
Trunk Lid Motifs	160	193	—
Trunk Lid Motif Attachment Angle	160	193	—
Trunk Lid Motif Sealing Pad ...	160	193	—
Trunk Lid Seal	159	193	—
V			
Valves	12	12	5
Valve Collars	12	12	5
Valve Guides	12	12	5
Valve Inserts	12	12	5
Valve Rocker	13	13	5
Valve Split Cones	12	12	5
Valve Springs	12	12	5
Valve Tappets...	2	2	1
W			
Water-Pipes	14	14	5
Water Pipe Connecting Hoses ...	14	14	5
Water Pipe Extension	14	14	5
Water Pipe Flanges	14	14	5
Water Pump	10	10	4
Water Pump Inlet Pipe	4	4	1
Water Pump Pulley	10	10	4
Water Pump Seal	10	10	4
Water Pump Spindle and Bearing Assembly	10	10	4
Water Pump Thrower Ring ...	10	10	4
Windscreen Glass	150	180	—
Windscreen Glass Finishers... ...	150	181	—
Windscreen Glass Seal	150	180	—
Windscreen Header Cappings ...	155	184	—
Windscreen Header Capping Joint Covers	155	184	—
Windscreen Panel	144	144	—
Windscreen Rubber Filler Strip ...	150	180	—
Windscreen Washer	252	252—256	36—37
Windscreen Washer Control Valve	252	—	36
Windscreen Washer Hoses ...	252	252—256	36—37
Windscreen Washer, Jar, Pump and Bracket	252	—	36
Windscreen Washer Jet Assembly	252	252—256	36—37
Windscreen Washer Motor ...	—	256	37
Windscreen Washer Pump ...	—	256	37
Windscreen Washer Reservoir ...	—	256	37
Windscreen Washer Strainer Tube Assembly	252	—	—
Windscreen Washer Tee Piece ...	252	252—256	36—37
Windscreen Wiper Arms	230	230	33
Windscreen Wiper Blades	230	230	33
Windscreen Wiper Motor	229	229	33
Windscreen Wiper Motor Bracket	230	230	—
Windscreen Wiper Outer Casings	230	230	33

CYLINDER BLOCK

Part No.	Description	Plate No.	No per Unit	Remarks
9924	**CYLINDER BLOCK (P.136257.F)**	1—1	1	
C.21630	**Core Plug,** at sides of Block	1—2	6	
C.317	**Core Plug,** at front of Block	1—3	2	
C.21631	**Core Plug,** at rear of Block	1—4	2	
260782	**Core Plug,** at rear end of camshaft	1—5	1	
C.22660	**Plug,** in Oil Gallery	1—6	2	
C.2296/1	**Washer,** (Copper) for Plugs	1—6A	2	
420304	**Dowel** (Short) R.H. Rear, locating Gearbox Support Plate and Bell Housing	1—7	1	
428423	**Dowel** (Long) L.H. Rear, locating Gearbox Support Plate and Bell Housing	1—8	1	
431244	**Dowel,** ring, locating Cylinder Heads	1—9	4	
422583	**Bush,** for Oil Pump Spindle	1—10	1	
431243	**Stud,** securing Cylinder Head and Rockers	1—11	20	
13108	**Nut,** on Studs		20	
422500/05	**Washer,** under Nuts		20	
431245	**Liner,** for Camshaft Front Bearing	1—12	1	
431246	**Liner,** for Camshaft Intermediate Bearing	1—13	4	
431247	**Liner,** for Camshaft Rear Bearing	1—14	1	
430680	**Dowel,** locating Bearing Caps		10	
431143	**Bolt,** securing Front Bearing Cap		2	
431144	**Bolt,** securing Intermediate, Centre and Rear Caps		8	
431142	**Lockplate,** on Bolts		10	
21106/16	**Bolt,** in Rear Cap		2	
430241/06	**Washer,** Spring, on Bolts		2	
22105/04	**Plug,** in Chain Oil Feed Hole	1—15	1	
400352	**Washer,** on Plug	1—16	1	
22105/04	**Drain Plug,** in Cylinder Block	1—17	2	
400352	**Washer,** on Plugs	1—18	2	
136065	**CAMSHAFT**	1—19	1	
430365	**Thrust Plate,** for Camshaft Bearing	1—20	1	
22105/05	**Screw,** Set, for Thrust Plate		2	
C.22295	**Lockplate,** on Setscrews		2	
430364	**Thrust Washer,** for Camshaft	1—21	1	
307925	**CAMSHAFT CHAIN WHEEL**	1—22	1	
422510/15	**Key,** for Camshaft Chain Wheel	1—23	1	
430399	**Nut,** securing Camshaft Chain Wheel	1—24	1	
430400	**Lockplate,** under Nut	1—25	1	
307363	**TIMING CHAIN**	1—26	1	
430426	**CHAIN TENSIONER (622302)**	1—27	1	
21104/11	**Bolt,** securing Tensioner		2	
430421	**Lockplate,** securing Bolts		1	

CYLINDER BLOCK

Part No.	Description	Plate No.	No. per Unit	Remarks
307920	**CHAIN VIBRATION DAMPER**	1—28	1	
22104/06	**Screw**, securing Damper to Cylinder Block		2	
400000	**Lockplate**, on Screws		2	
309236	**TAPPET BLOCK AND BUSH ASSEMBLY**	1—29	1	
432997	**Bush**, in Tappet Guide		16	
431257	**Tappet Assembly**, comprising Tappet Body and Tip	1—30	16	
430563	**Ball End**, for Tappet	1—31	16	
136560	**Cover Plate**, for Tappet Block	1—32	1	
432722	**Glass Wool**, packing between Cover and Cover Plate		As req'd	
136114	**Gasket**, between Tappet Block and Cylinder Block	1—33	1	
22105/07	**Screw**, securing Cover Plate and Tappet Block to Cylinder Block		12	
430241/05	**Washer**, Spring, on Screws		12	
430680	**Dowel**, locating Tappet Block	1—34	2	
431923	**CRANKSHAFT ASSEMBLY (S136059.A)**	1—35	1	
307887	**Main Bearing**, Front Journal	1—36	2	
307888	**Main Bearing**, Top Intermediate Journals	1—37	3	
308599	**Main Bearing**, Bottom Intermediate Journals	1—38	3	
307889	**Main Bearing**, Rear Journal	1—39	2	
307890/1	**Thrust Washer**, for Crankshaft (Standard)	1—40	2	Alternatives
307890/2	**Thrust Washer**, for Crankshaft (oversize .0025")	1—40	2	Alternatives
307890/3	**Thrust Washer**, for Crankshaft (oversize .005")	1—40	2	Alternatives
431242/1	**Oil Seal**, on Crankshaft (Grade A)	1—41	2	Alternatives
431242/2	**Oil Seal**, on Crankshaft (Grade B)	1—41	2	Alternatives
431242/3	**Oil Seal**, on Crankshaft (Grade C)	1—41	2	Alternatives
307339	**CHAINWHEEL ON CRANKSHAFT**	1—42	1	
422510/39	**Key**, for Chainwheel	1—43	1	
308395	**DAMPER AND PULLEY ASSEMBLY**		1	Fitted from Chassis No. 136711 to 137161 DQ.450 and to all DQ.451
307881	**Hub**, on Crankshaft	1—44	1	
308741	**Pulley**, on Hub	1—45	1	
422510/39	**Key**, for Pulley	1—46	1	
309143	**Damper**, (Metalastic 51/192/2)	1—47	1	
428312	**Bolt**, securing Damper to Hub		6	
423004	**Lockplate**, locking Bolts		3	
309045	**DAMPER AND PULLEY ASSEMBLY**		1	Fitted to Chassis No. 137162 and subs. DQ.450 and all DR.450/1
308854	**Pulley**, on Hub		1	
	All other items as for 308395			

CYLINDER BLOCK

Part No.	Description	Plate No.	No. per Unit	Remarks
425916	**JAW, STARTING**	1—48	1	
425917	**Lockwasher,** locking Starting Jaw		1	
307787	**CONNECTING ROD ASSEMBLY**	1—49	8	
431133	**Bolt,** securing Bearing Cap to Connecting Rod		16	
430424	**Nut,** Nyloc, on bolts		16	
307861	**Bush,** in Small End		8	
307891	**Bearing,** Big End (VP.4334)	1—50	16	
308382	**PISTON COMPLETE**	1—51	8	
432937	**Pressure Ring,** Upper (Chrome Plated)	1—52	8	
432938	**Pressure Ring,** Lower (Taper)	1—53	8	
432661	**Scraper Ring**	1—54	8	
431756	**Gudgeon Pin,** retaining Piston to Connecting Rod	1—55	8	
432457	**Circlip,** retaining Gudgeon Pin in Pistons	1—56	16	
308874	**CHAIN COVER PLATE ASSEMBLY**	1—57	1	
135924	**Gasket,** between Cover Plate, Cylinder Block and Sump	1—58	1	
22104/05	**Screw,** Set, securing Cover Plate to Cylinder Block		12	
430241/04	**Washer,** Spring, on Setscrews		12	
22105/05	**Screw,** Set, securing Cover Plate to Sump		4	
430241/05	**Washer,** Spring, on Setscrews		4	
C.22670	**GEARBOX SUPPORT PLATE**	1—59	1	
22105/07	**Screw,** securing Support Plate		3	
430241/05	**Washer,** Spring, on Screws		3	
308379	**OIL SUMP ASSEMBLY**	1—60	1	
136315	**Tray,** for Oil Sump	1—61	1	
22104/04	**Screw,** securing Tray to Sump		4	
431945	**Lockplate,** under Screws		4	
22105/07	**Screw,** Set, securing Oil Sump to Cylinder Block		18	
430241/05	**Washer,** Spring, on Screws		18	
431285/06	**Drain Plug,** for Oil Sump	1—62	1	
428015	**Washer** (Copper) on Plug	1—63	1	

CYLINDER BLOCK

Part No.	Description	Plate No.	No. per Unit	Remarks
136100	**OIL SUMP BRIDGE PIECE**	1—64	1	
22105/09	**Bolt**, securing Bridge Piece to Cylinder Block		2	
430241/05	**Washer**, Spring, on Bolts		2	
308403	**Gasket**, between Bridge Piece and Sump	1—65	1	
308470	**Gasket**, between Sump and Rear Crankshaft Bearing Cap	1—66	1	
431936	**OIL DIPSTICK**	1—67	1	
136111	**ROCKER OIL FEED PIPE ASSEMBLY**	1—68	1	
430417	**Banjo Bolt**, (Long)	1—69	1	
430415	**Banjo Bolt**, (Short)	1—70	4	
416490	**Washer** (Soft Copper) on each face of Banjos	1—71	10	
432518	**OIL FILLER TUBE ASSEMBLY**	1—72	1	
432515	**Tube**, Oil Filler		1	
432517	**Flange**, on Tube		1	
308840	**OIL FILLER EXTENSION TUBE AND CAP ASSEMBLY**	1—73	1	
431288	**CAP FOR OIL FILLER**	1—74	1	
136105	**WATER PUMP INLET PIPE**	1—75	1	
431172	**Gasket**, between Inlet Pipe and Water Pump	1—76	1	
22105/08	**Screw**, securing Inlet Pipe and Water Pump to Cylinder Block		5	
430241/05	**Washer**, Spring, on Screws		5	
430429	**Gasket**, between Inlet Pipe Flanges and Cylinder Block	1—77	2	
22105/08	**Screw**, securing Inlet Pipe Flanges to Cylinder Block		4	
430241/05	**Washer**, Spring, on Screws		4	

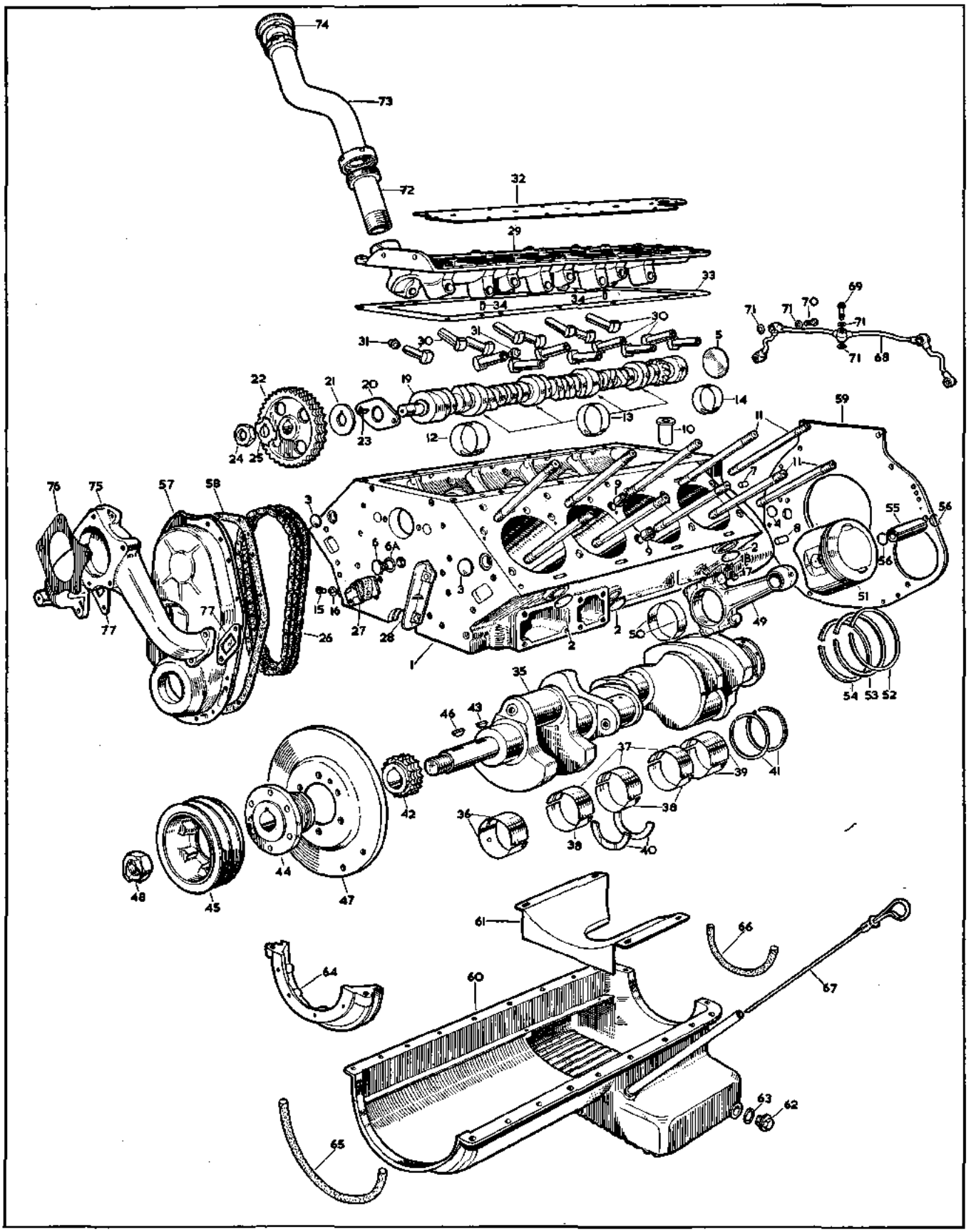
74
73
72
32
29
33
34
B-34
30
31
5
69
70
71
68
22
21
20
19
23
24
25
14
13
12
10
59
11
76
75
57
58
3
6
6A
15
16
27
28
26
77
1
2
4
8
9
7
18
17
55
56
51
50
49
54
53
52
35
46
43
37
39
41
42
36
38
40
44
47
48
45
61
66
64
60
67
63
62
65

PLATE 1

OIL PUMP

Part No.	Description	Plate No.	No per Unit	Remarks
431567	**OIL PUMP BODY ASSEMBLY**	2—1	1	
430160	**Bush,** in Oil Pump Body		1	
430374	**Gasket,** for Oil Pump Body	2—2	1	
22105/06	**Screw,** securing Body to Rear Bearing Cap	2—3	3	
430356	**Lockplate,** under screws	2—4	3	
431267	**OIL PUMP SPINDLE ASSEMBLY**	2—5	1	
431266	**Spindle only**		1	
422510/11	**Key,** for Pump Spindle		1	
C.20490	**Spiral Gear** on Spindle		1	
401831	**Thrust Washer,** on Spiral Gear	2—6	1	
430306	**DRIVING GEAR IN OIL PUMP**	2—7	1	
430307	**DRIVEN GEAR AND BUSH ASSEMBLY**	2—8	1	
426868	**Bush,** for Driven Gear		1	
431483	**OIL PUMP COVER**	2—9	1	
22104/06	**Screw,** securing cover	2—10	4	
423044	**Lockplate,** locking Screws	2—11	2	
430382	**OIL RELIEF VALVE**	2—12	1	
431498	**Spring,** in Valve	2—13	1	
431948	**Cap,** retaining Spring	2—14	1	
431949	**Lockplate,** locking Cap	2—15	1	
431767	**OIL STRAINER ASSEMBLY**	2—16	1	
431640	**Gasket,** between Strainer and Oil Pump Body	2—17	1	
22104/05	**Screw,** securing Strainer to Oil Pump Body	2—18	2	
431641	**Lockplate,** on Screws	2—19	2	

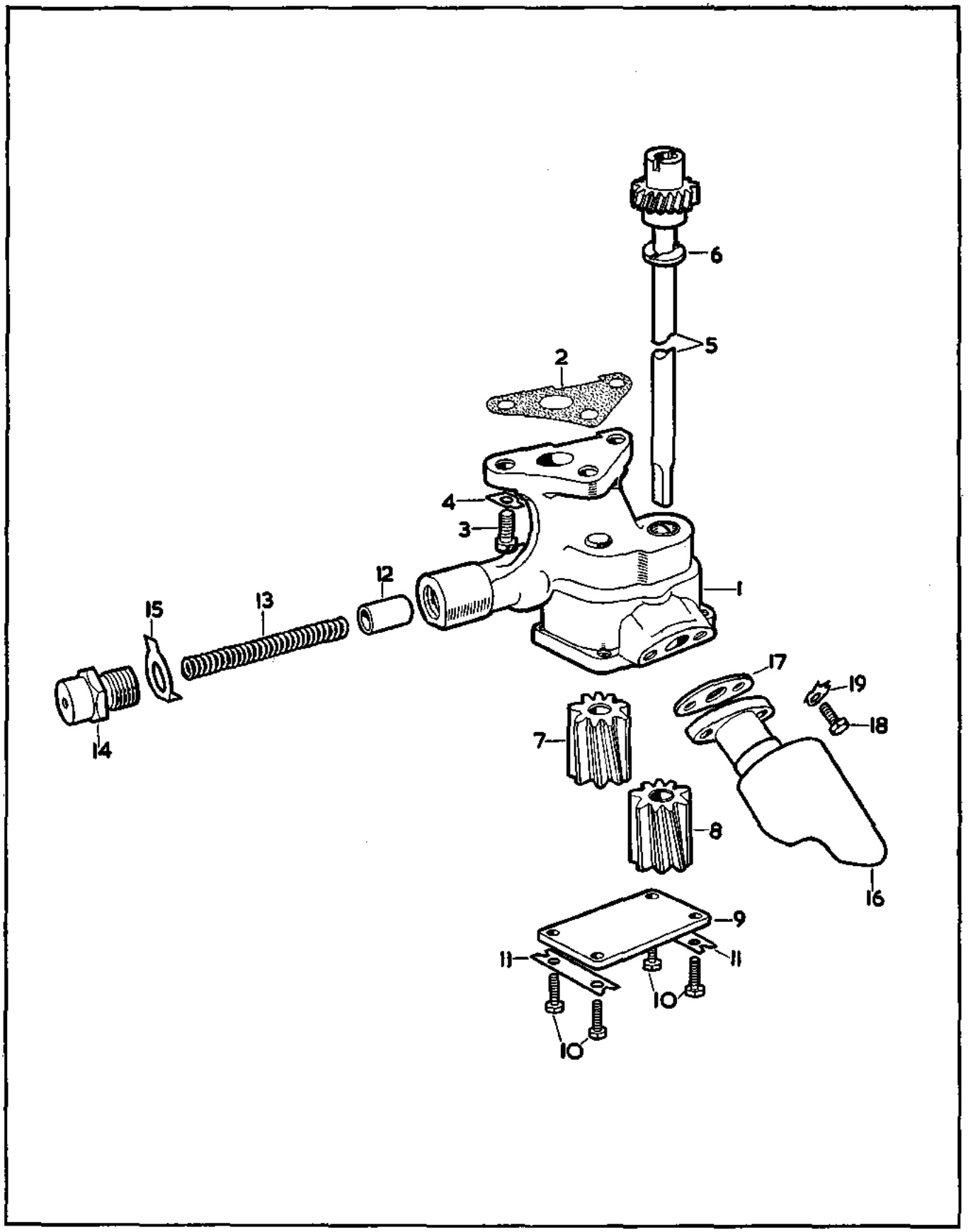

PLATE 2

OIL CLEANER

Part No.	Description	Plate No.	No. per Unit	Remarks
308388	**OIL CLEANER ASSEMBLY**	3—1	1	
308388/01	**Body Assembly**, complete with Balance Valve	3—2	1	
307963/02	**Gasket**, between Body and Shell	3—3	1	
307963/03	**Gasket**, between Body and Element	3—4	1	
307963/04	**Shell Assembly**, for Oil Cleaner	3—5	1	
307963/03	**Gasket**, between Element and Retainer	3—6	1	
307963/05	**Element**, for Cleaner	3—7	1	
307963/06	**Bolt**, securing Body to Shell	3—8	1	
307963/07	**Washer**, Aluminium, on Bolt	3—9	1	
430427	**Gasket**, between Body and Cylinder Block	3—10	1	
22105/08	**Bolt**, securing Body to Cylinder Block		4	
430241/05	**Washer**, Spring, on Bolts		4	
432049	**OIL PRESSURE INDICATOR SWITCH (AC. DELCO 7954117)**	3—11	1	**ALTERNATIVE TO PART No. 432133**
432133	**OIL PRESSURE INDICATOR SWITCH (SMITHS P.S. 5307/07)**		1	**ALTERNATIVE TO PART No. 432049**

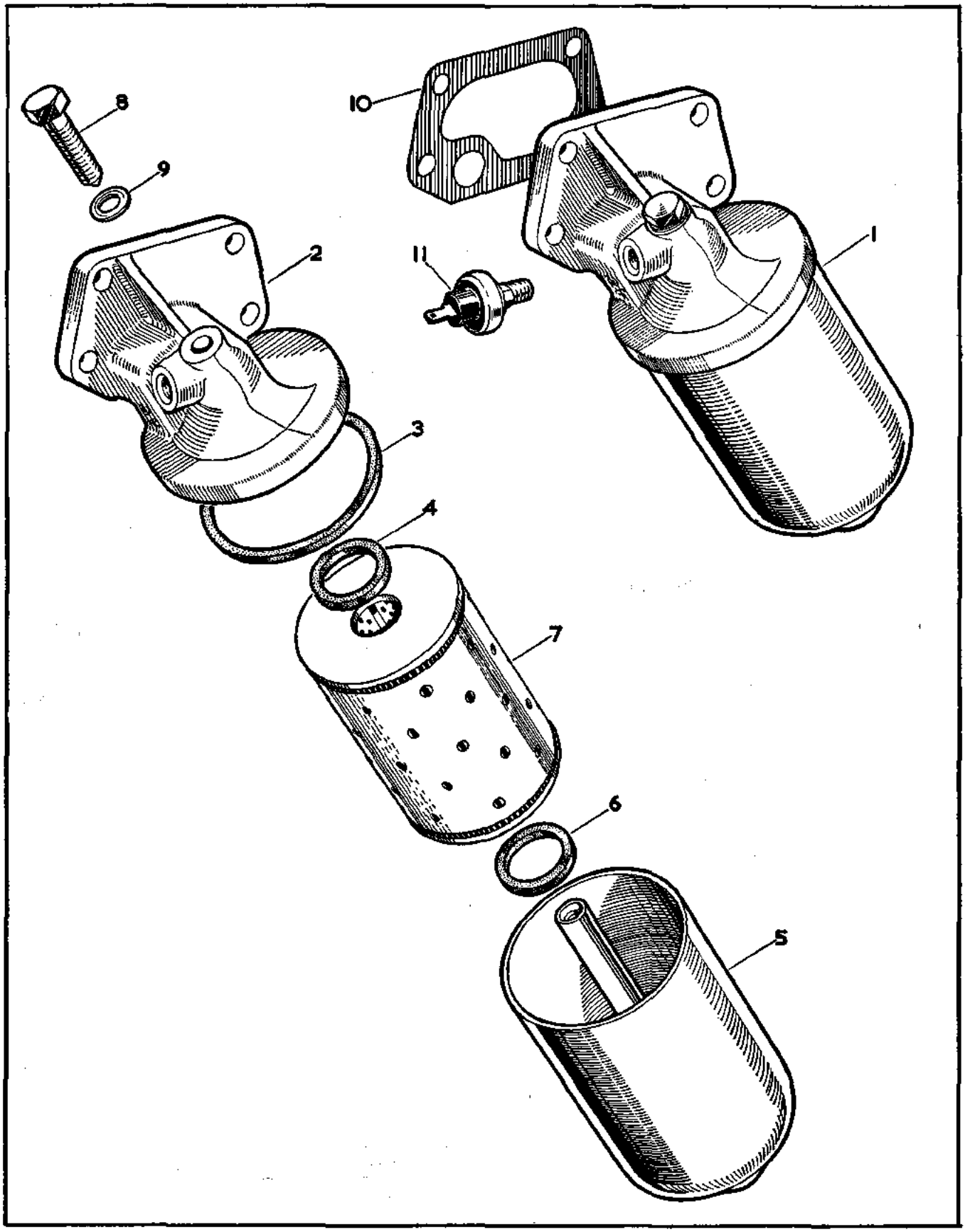

PLATE 3

WATER PUMP

Part No.	Description	Plate No.	No. per Unit	Remarks
307880	**WATER PUMP ASSEMBLY**		1	Fitted from Engine No. 90003 to 93339
308689	**Pump Body** (18038)	4—1	1	
431367	**Spindle and Bearing Assembly,** for Water Pump (Hoffman N4083F)	4—2	1	
431368	**Screw,** locating Spindle and Bearing Assembly in Body	4—3	1	
431369	**Washer** (Fibre) on Locating Screw	4—4	1	
431370	**Seal** (SCD.331/62)	4—5	1	
431371	**Thrower Ring,** on Spindle (18040)	4—6	1	
308000	**Impellor,** on Spindle (18391)	4—7	1	
307878	**Pulley,** for Fan	4—8	1	
309051	**WATER PUMP ASSEMBLY**		1	Fitted to Engine No. 93340 and subs.
308984	**Pulley,** for Fan		1	
	All other items as for Water Pump Assembly 307880			
431172	**Gasket,** between Water Pump Assembly and Water Inlet Pipe	4—9	1	
22105/08	**Screw,** Set, securing Water Pump Assembly to Water Inlet Pipe		5	
430241/05	**Washer,** Spring, on Setscrews		5	
308868	**FAN ASSEMBLY (6 BLADE)**	4—10	1	**MAY BE USED AS A REPLACEMENT ON ENGINES FITTED WITH 2 BLADED FANS**
309277	**FAN ASSEMBLY (8 BLADE)**		1	**FOR USE IN COUNTRIES WITH HIGH AMBIENT TEMPERATURES**
22104/06	**Screw,** Set, securing Fan Assembly to Water Pump Pulley		4	
430241/04	**Washer,** Spring, on Setscrews		4	
308392	**FAN BELT (3/8")**	4—11	1	Fitted from Engine No. 90003 to 93339
308985	**FAN BELT (1/2")**		1	Fitted from Engine No. 93340 to 93648
C.20808	**FAN BELT (1/2")**		1	Fitted to Engine No. 93649 and subs. **NOTE :—This Fan Belt must only be fitted in conjunction with Dynamo Pulley C.20689.**
C.21679	**FAN BELT (3/8")**		1	**SUPPLIED TO SPECIAL ORDER ONLY AND MUST ONLY BE FITTED IN CONJUNCTION WITH DYNAMO PULLEY C.21678.**

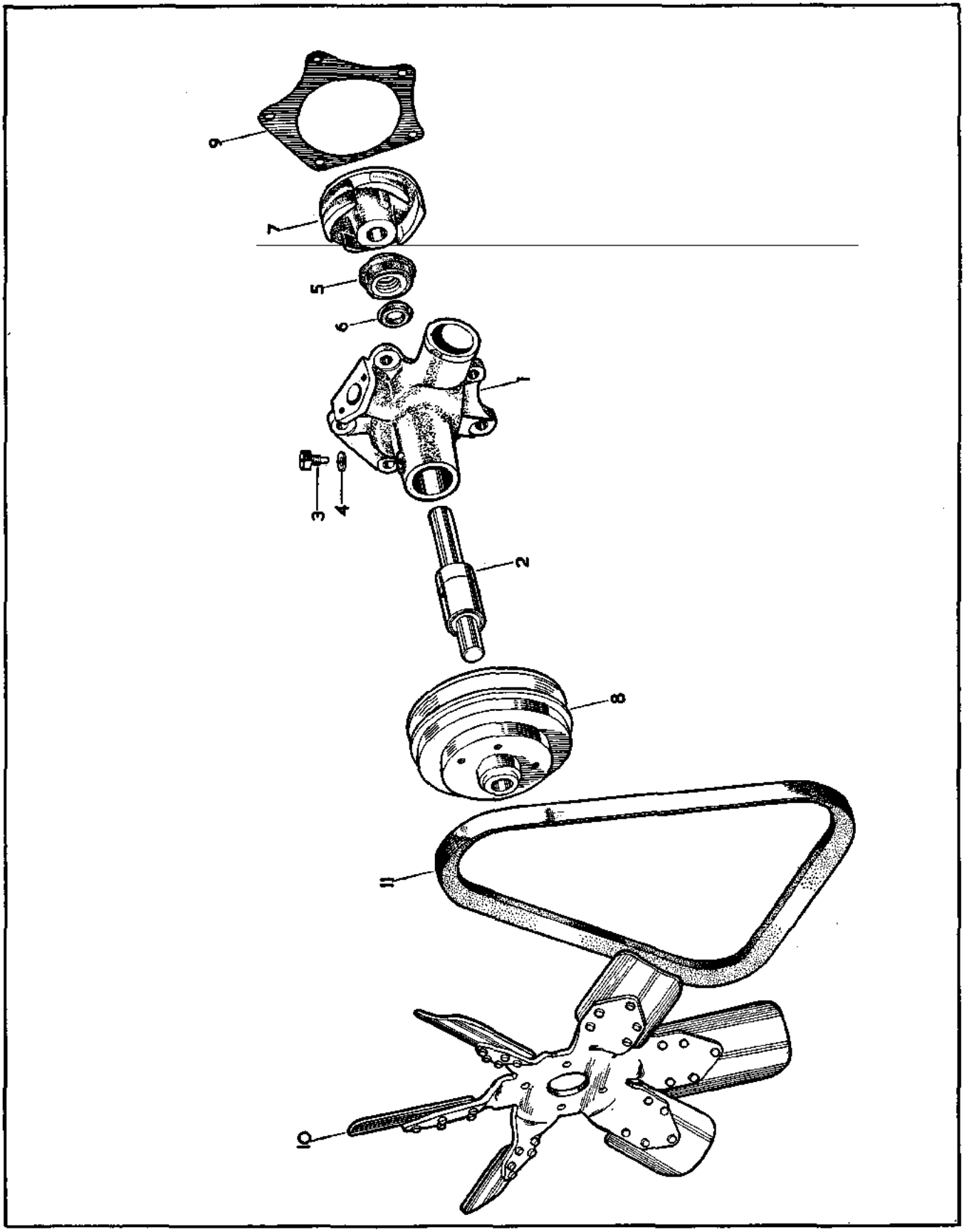

PLATE 4

CYLINDER HEADS

Part No.	Description	Plate No.	No. per Unit	Remarks
136284	**CYLINDER HEAD ASSEMBLY**	5—1	2	
432099	**Plug,** Taper	5—2	4	
431853	**Insert,** Inlet and Exhaust Valves	5—3	16	
431151	**Guide,** for Inlet Valves	5—4	8	
431152	**Guide,** for Exhaust Valves	5—5	8	
34005/14	**Stud,** for Exhaust Manifolds	5—6	16	
422804	**Nut,** for Exhaust Manifolds		16	
422500/02	**Washer,** Plain, on Studs		16	
906083	**Palnut,** $\frac{5}{16}$" × 24 U.N.F.		16	
136142	**Gasket,** between Cylinder Heads and Cylinder Block	5—7	2	
430741	**Tube,** for Sparking Plugs	5—8	8	
430742	**Washer,** on Tubes	5—9	8	
22105/04	**Plug,** sealing Rocker Feed apertures in Cylinder Heads	5—10	4	
400352	**Washer,** on Plugs	5—11	4	
430444	**Blanking Plate,** (Water) on Cylinder Heads	5—12	2	
430429	**Gasket,** between Plates and Cylinder Heads	5—13	2	
22105/06	**Screw,** securing Plates to Heads		4	
430241/05	**Washer,** Spring, on Screws		4	
307825	**INLET VALVE (S.307825)**	5—14	8	
308300	**EXHAUST VALVE (S.308300)**	5—15	8	
432528	**VALVE SPRING, INNER**	5—16	16	
432527	**VALVE SPRING, OUTER**	5—17	16	
432521	**Seat Washer,** for Valve Springs	5—18	16	
432519	**Collar,** at top of Inlet Valve Springs	5—19	8	
532520	**Collar,** at top of Exhaust Valve Springs	5—20	8	
432971	**Split Cone,** for Inlet Valves	5—21	8	
432927	**Split Cone,** for Exhaust Valves	5—22	8	
308908	**ROCKER SHAFT ASSEMBLY (INLET)**	5—23	2	

CYLINDER HEADS

Part No.	Description	Plate No.	No per Unit	Remarks
307907	**ROCKER SHAFT ASSEMBLY (EXHAUST)**	5—24	2	
431731	**Bracket and Dowel Assembly,** (Front, Rear and Intermediate)	5—25	16	
431732	**Bracket and Dowel Assembly,** (Centre, Shaft Locating)	5—26	4	
430551	**Locating Screw,** in Centre Shaft Locating Brackets	5—27	4	
307857	**VALVE ROCKER INLET**	5—28	8	
307856	**VALVE ROCKER EXHAUST**	5—29	8	
431265	**Spacing Spring,** between Rockers and Brackets	5—30	16	
430412	**Washer,** retaining Springs	5—31	48	
431011	**Ball End,** for Rockers	5—32	16	
430419	**Nut,** securing Ball Ends	5—33	16	
431261	**PUSH ROD ASSEMBLY (INLET)**	5—34	8	
431260	**PUSH ROD ASSEMBLY (EXHAUST)**	5—35	8	
308389	**INDUCTION MANIFOLD**	5—36	1	
34005/4	**Stud,** for Carburetters	5—37	8	
13105	**Nut,** securing Carburetters		8	
906083	**Palnut,** $\frac{5}{16}$" U.N.F.		8	
308340	**Gasket,** between Induction Manifold and Cylinder Heads	5—38	2	
22105/08	**Screw,** Set, securing Induction Manifold to Cylinder Heads		16	
430241/05	**Washer,** Spring, on Setscrews		16	
136307	**EXHAUST MANIFOLD**	5—39	2	
307902	**Gasket,** between Manifolds and Cylinder Heads	5—40	2	

CYLINDER HEADS

Part No.	Description	Plate No.	No. per Unit	Remarks
136429	**WATER OUTLET PIPE (P.136429 A)**	5—41	1	
430429	**Gasket,** between Water Outlet Pipe and Cylinder Heads	5—42	2	
22105/08	**Screw,** securing Water Outlet Pipe to Cylinder Heads		4	
430241/05	**Washer,** Spring, on Screws		4	
22104/07	**Screw,** securing Water Outlet Pipe to Water Inlet Pipe		2	
430241/04	**Washer,** Spring, on Screws		2	
304358	**THERMOSTAT UNIT (1572115) IN WATER OUTLET PIPE (OPENS AT 173°F.)**	5—43	1	
308391	**WATER OUTLET PIPE EXTENSION (TO RADIATOR TOP HOSE)**	5—44	1	
422718	**Gasket,** between Extension and Outlet Pipe	5—45	1	
22105/07	**Screw,** securing Extension to Outlet Pipe		2	
430241/05	**Washer,** Spring, on Screws		2	
308690	**WATER PIPE ASSEMBLY, FROM WATER OUTLET PIPE TO INDUCTION MANIFOLD**	5—46	1	
308692	**WATER PIPE ASSEMBLY FROM INDUCTION MANIFOLD TO WATER PUMP**	5—47	1	
432237	**WATER PIPE FLANGE ASSEMBLY**	5—48	4	
432236	**Gasket,** under Flanges	5—49	4	
22104/06	**Screw,** Set, securing Flanges		8	
430241/04	**Washer,** Spring, on Setscrews		8	
432240	**HOSE, CONNECTING FLANGES TO WATER PIPES**	5—50	4	
C.2905/3	**Clip,** securing Hoses	5—51	8	

CYLINDER HEADS

Part No.	Description	Plate No.	No. per Unit	Remarks
308940	**CYLINDER HEAD TOP COVER, R.H.**	5—52	1	
308939	**CYLINDER HEAD TOP COVER, L.H.**		1	
307903	**Gasket,** between Top Covers and Cylinder Heads	5—53	2	
432136	**Nut,** Special, securing Top Covers to Sparking Plug Tubes	5—54	8	
425280/25	**'O' Ring,** for Nuts	5—55	8	
430434	**SPARKING PLUG (CHAMPION N.8)**		8	
308701	**LOW TENSION CABLE FROM COIL TO DISTRIBUTOR**		1	
	HIGH TENSION SPARKING PLUG LEADS			
432659/17	**Lead to No. 1R, Sparking Plug**		1	
432659/17	**Lead to No. 2R Sparking Plug**		1	
432659/07	**Lead to No. 3R, Sparking Plug**		1	
432659/07	**Lead to No. 4R, Sparking Plug**		1	
432659/15	**Lead to No. 1L, Sparking Plug**		1	
432659/15	**Lead to No. 2L, Sparking Plug**		1	
432659/07	**Lead to No. 3L, Sparking Plug**		1	
432659/07	**Lead to No. 4L Sparking Plug**		1	
431262/03	**Lead to Ignition Coil**		1	
432775	**Distributor Terminal,** (Lucas 54190236)		8	Fitted from Engine No. 90003 to 93308
425483	**Nut,** on Terminals (Lucas 410600)		8	
432602	**Holder,** Plug Leads		8	
431704	**Connector,** Plug Leads. (Lucas 423967)		8	
432773	**Staple,** (Lucas 54190263)		16	
430437	**Ring Rubber,** at entry of Plug Leads to Cylinder Head		8	
308907	**Clip,** for H.T. Leads		1	
431308	**Carrier,** securing Plugs Leads to Cylinder Head Top Covers		10	
431309	**Carrier,** (Centre)		3	
12304/12	**Screw,** securing Carriers		1	
422514/05	**Nut,** on Screw		1	
22304/10	**Screw,** securing Carriers to Top Covers		2	
22304/07	**Screw,** securing Carriers to Top Covers		2	
431404	**Ring,** Rubber, for H.T. Cables (S.I.C. 5986)		2	
432775	**Distributor Terminal,** (Lucas 54190236)		8	Fitted to Engine No. 93309 and subs.
425483	**Nut,** on Terminals (Lucas 410600)		8	
432660	**Plug Cover,** Waterproof (Champion WC/548)		8	
432773	**Staple,** (Lucas 54190263)		16	
C.18285	**Rubber Sleeve**		8	

CYLINDER HEADS

Part No.	Description	Plate No.	No. per Unit	Remarks
432665	**SPARKING PLUG EXTENSION ASSEMBLY**		8	Fitted to Engine No. 93309 and subs.
432656	**Extension,** for Sparking Plugs		8	
432653	**Holder,** for Extensions		8	
432686	**Screw**		8	
432663	**Contact Clip**		8	
432658	**Spring Ring,** on Contact Clips		8	
432687	**Shim Washer,** on Screws		8	
136558	**IGNITION LEAD COVER, R.H.**		1	Fitted to Engine No. 93309 and subs.
136559	**IGNITION LEAD COVER, L.H.**		1	
432724	**Carrier,** (Top Bottom) on R.H. Cover		8	
432724	**Carrier,** (Top Bottom, on L.H. Cover		6	
432725	**Carrier,** (Centre), on R.H. Cover		4	
432725	**Carrier,** (Centre), on L.H. Cover		3	
432726	**Spring,** for Carriers on R.H. Cover		4	
432726	**Spring,** for Carriers on L.H. Cover		3	
11104/11	**Bolt,** securing Carriers to R.H. Cover		2	
11104/11	**Bolt,** securing Carriers to L.H. Cover		1	
422500/01	**Washer,** on Bolt, for R.H. Cover		2	
422500/01	**Washer,** on Bolt, on L.H. Cover		1	
422514/05	**Nut,** on Bolt, for R.H. Cover		2	
422514/05	**Nut,** on Bolt, for L.H. Cover		1	
21104/11	**Bolt,** securing Carriers to Cylinder Head Top Covers		2	
430241/04	**Washer,** Spring, on Bolts		2	

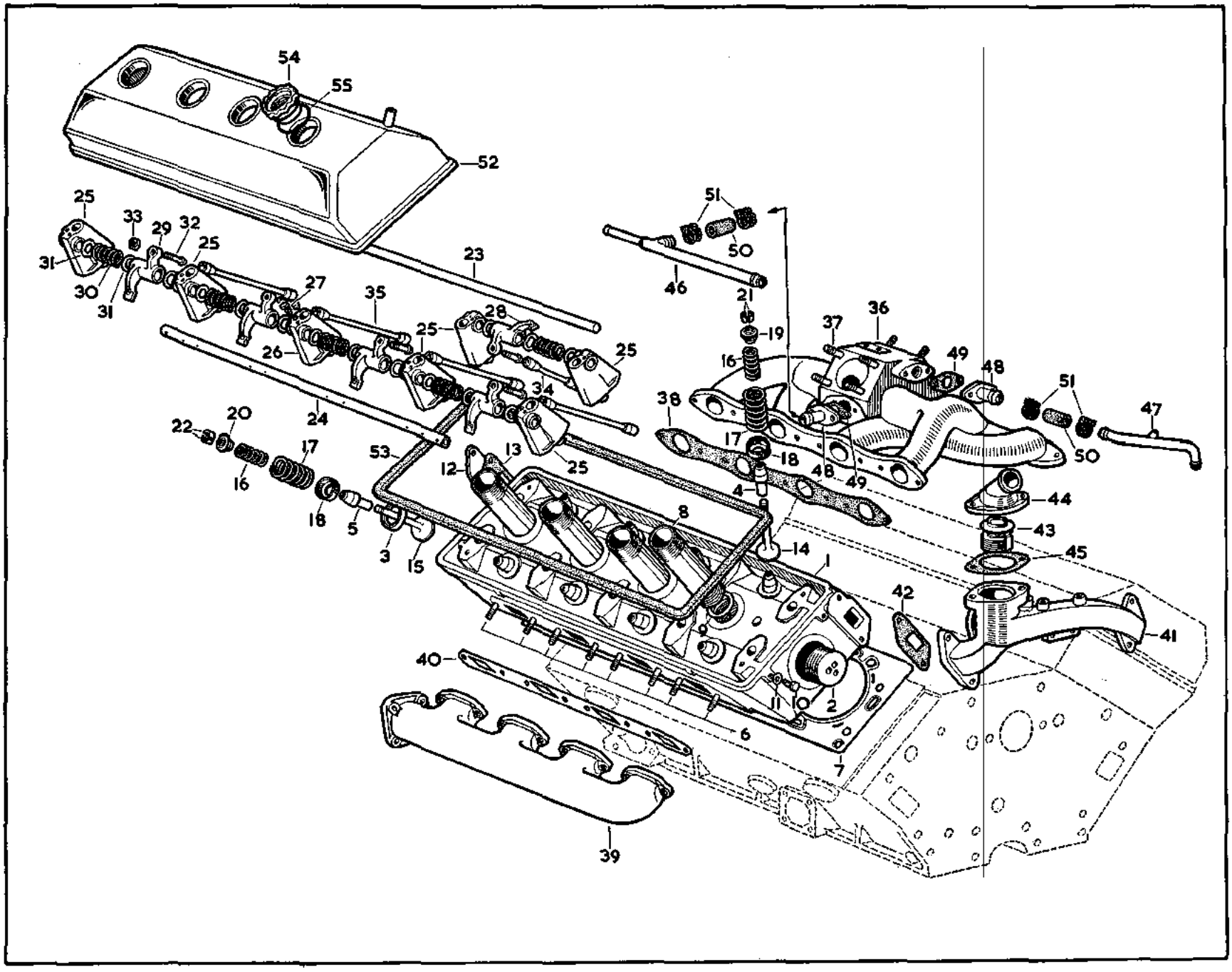
54
55
52
25
33
29
32
25
31
30
31
23
27
35
28
25
26
25
34
24
20
22
17
16
53
13
12
25
18
5
3
15
8
4
14
1
42
41
40
11
2
6
7
39
51
50
46
21
19
16
37
36
49
48
38
17
18
48
49
51
50
47
44
43
45

PLATE 5

Part No.	Description	Plate No.	No. per Unit	Remarks
136308	**CARBURETTER COMPLETE (S.U. TYPE HD.8) (AUC.949)**	6—1	1 pair	
8762	**Body,** for R.H. Carburetter (AUC.8271)	6—2	1	
136308/01	**Body,** for L.H. Carburetter (AUC.8252)		1	
7868	**Adaptor,** for Automatic Ignition on R.H. Carburetter (AUC.8190)	6—3	1	
7091	**Gasket,** between Adaptor and Carburetter (AUC.2014)	6—4	1	
7961	**Screw,** securing Adaptor (AUC.5156)		2	
136308/04	**Suction Chamber Piston Assembly** (AUC.8062)	6—5	2	
136308/05	**Damper Assembly,** in Suction Chamber (AUC.8113)	6—6	2	
7095	**Washer,** for Damper (AUC.4900)	6—7	2	
135386/04	**Spring,** assisting return of Piston (AUC.4826)	6—8	2	
7872	**Skid Washer,** under Spring at Bottom of Piston (AUC.1048)	6—9	2	
5618	**Screw,** securing Suction Chamber to Carburetter (AUC.2175)		8	
5980	**Jet Needle,** (UL)	6—10	2	
7860	**Jet and Diaphragm Assembly,** comprising, Jet Unit, with Diaphragm and Cap (AUC.8156)	6—11	2	
136308/08	**Jet Housing Assembly, R.H.** for Jet Unit (AUC.8670)	6—12	1	
136308/07	**Jet Housing Assembly, L.H.** for Jet Unit (AUC.8671)		1	
6958	**Jet Bearing,** (AUC.2001)	6—13	2	
6959	**Jet Nut,** (AUC.2002)	6—14	2	
6960	**Jet Spring,** (AUC.2006)	6—15	2	
135996/15	**Float Chamber Assembly, R.H.** (AUC.2062)	6—16	1	
135996/14	**Float Chamber Assembly, L.H.** (AUC.2067)		1	
7115	**Bolt,** securing Float Chamber (AUC.2110)		8	
135996/17	**Lid,** for Float Chamber, R.H. (AUC.4106)	6—17	1	
135996/16	**Lid,** for Float Chamber, L.H. (AUC.4103)		1	
7119	**Gasket,** under Lids (AUC.1147)	6—18	2	
135996/18	**Cap Nut,** securing Lid to Float Chamber (AUC.1163)	6—19	2	
7120	**Washer,** (Alum) under Cap Nut (AUC.1557)	6—20	2	
1090	**Float,** (AUC.1123)	6—21	2	
6970	**Needle and Seat,** controlling flow to Float Chamber (AUC.8170)	6—22	2	
7118	**Hinged Lever,** operating Float Needle (AUC.1980)	6—23	2	
1153	**Pin,** securing Lever (AUC.1152)	6—24	2	
8759	**Sliding Rod and Cam Shoe Assembly** (AUC.8962)	6—25	2	
8760	**Spring,** for Sliding Rod (AUC.2020)	6—26	2	
8761	**Top Plate,** for Sliding Rod (AUC.2019)	6—27	2	
7879	**Screw,** securing Top Plate (AUC.4790)		2	
7048	**Stop Screw,** for Top Plate (AUC.2521)	6—28	2	
5682	**Spring,** on Stop Screw (AUC.2451)	6—29	2	
6967	**Slow Running Adjusting Valve** (AUC.2028)	6—30	2	
6966	**Gland Spring,** for Valve (AUC.2027)	6—31	2	
6968	**Gland Washer,** (Neoprene) (AUC.2029)	6—32	2	
6969	**Dished Washer,** (Brass) (AUC.2030)	6—33	2	
136308/03	**Throttle Spindle,** (AUC.1287)		2	
7016	**Throttle Disc,** (Butterfly), (AUC.4890)		2	
7046	**Screw,** securing Disc to Spindle (AUC.1358)		4	
135996/04	**Throttle Stop, R.H.** (AUC.2023)		1	
135060/30	**Throttle Stop L.H.,** (AUC.2022)		1	
7050	**Taper Pin,** for Throttle Stops (AUC.2106)		2	
135966/19	**Elbow,** for over-flow Pipe (AUC.8090)	6—34	2	
308393	**OVERFLOW PIPE FOR CARBURETTERS**	6—35	1	
431354	**Clip,** securing Pipe	6—36	1	

CARBURETTERS

Part No.	Description	Plate No.	No. per Unit	Remarks
308957	**SUCTION PIPE ASSEMBLY FROM CARBURETTER TO VACUUM CONTROL**	6—37	1	
C.14212	**SUCTION PIPE CONNECTOR**	6—38	1	
432607	**THROTTLE LEVER ASSEMBLY**	6—39	2	
426933/36	**Bolt**, securing Throttle Lever		2	
426935/4	**Nut**, on Bolt		2	
423199/2	**Washer**, Plain, under Nut		2	
432539	**BALL END FOR MIXTURE LEVER**	6—40	2	
422543/2	**Nut**, securing Ball Ends		2	
430241/03	**Washer**, Spring, under Nuts		2	
428470	**INSULATING PIECE FOR CARBURETTERS**	6—41	2	
C.20317/03	**PETROL PIPE, BETWEEN CARBURETTERS**	6—42	1	
C.20295	**Olive**, for Carburetters		2	
C.20294	**Union Nut**, for Carburetters		2	

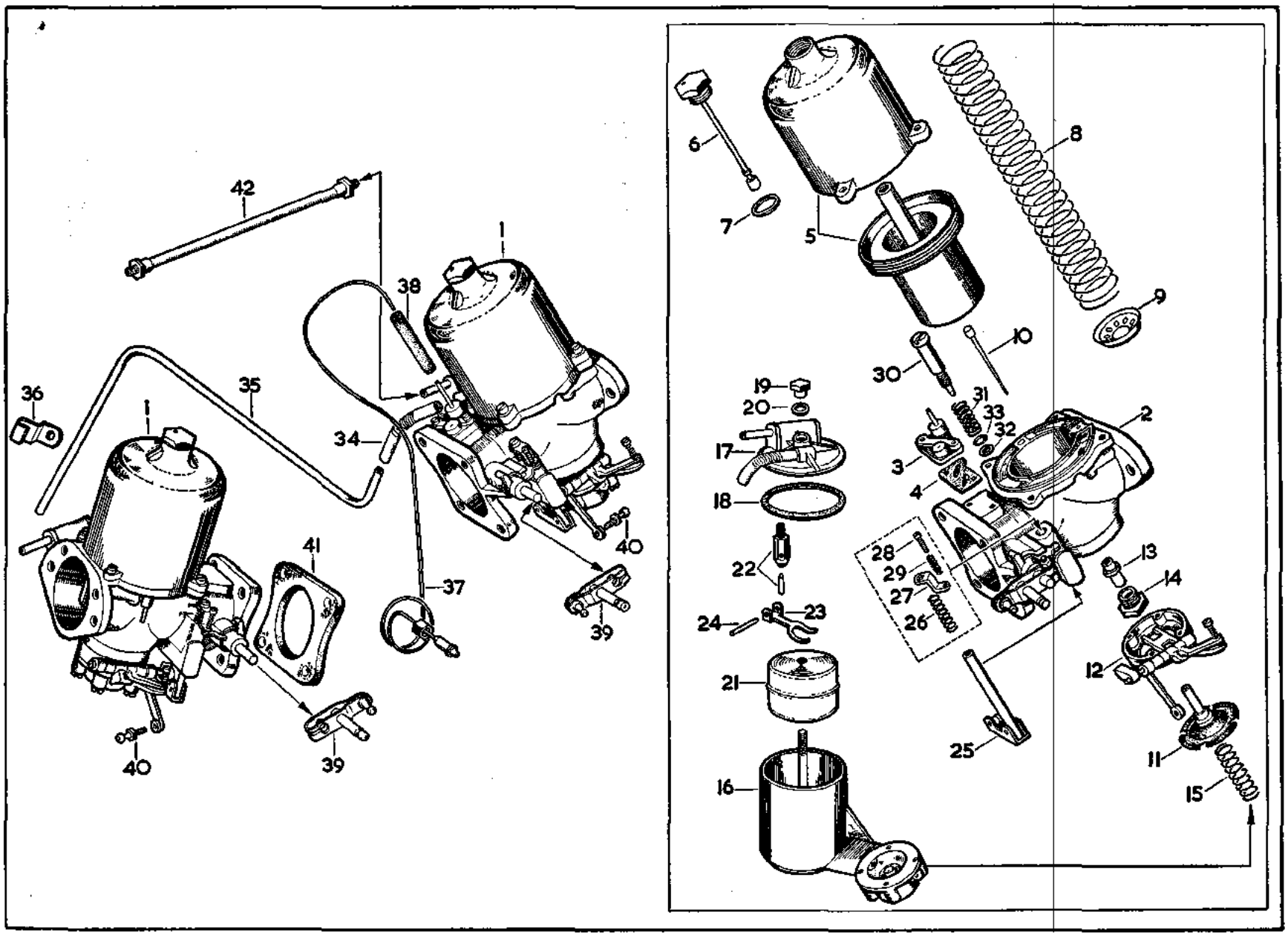
42
38
1
36
35
34
1
41
37
40
39
40
39
6
7
5
8
9
10
30
19
20
17
18
22
24
23
21
16
31
33
32
2
3
4
28
29
27
26
13
14
12
25
11
15

PLATE 6

AIR SILENCER

Part No.	Description	Plate No.	No. per Unit	Remarks
136448	**AIR SILENCER (P.D. 2559/1)**	7—1	1	
136448/01	**Element Assembly** (5601)	7—2	1	
308944	**AIR SILENCER BOWL ASSEMBLY**	7—3	1	
88603/01	**Wing Nut,** (Air Silencer Clamp Stud)	7—4	1	
432671	**Washer,** Spring, under Wing Nut	7—5	1	
308564	**GASKET FOR AIR SILENCER BOWL**	7—6	1	
136379	**AIR SILENCER PIPE, R.H.**	7—7	1	
136378	**AIR SILENCER PIPE, L.H.**		1	
428387	**Gasket,** between Air Silencer Pipes and Carburetters	7—8	2	
22105/08	**Screw,** securing Air Silencer Pipes to Carburetters		4	
430241/05	**Washer,** Spring, on Screws		4	
432679	**AIR SILENCER PIPE HOSE**	7—9	2	
423176/36	**Clip,** on Hoses	7—10	4	
432960	**BREATHER HOSE**	7—11	2	
423176/06	**Clip,** on Hoses	7—12	4	
432677	**AIR SILENCER BOWL SUPPORT BRACKET**	7—13	1	
22105/04	**Screw,** securing Bracket		4	
430241/05	**Washer,** Spring, on Screws		4	

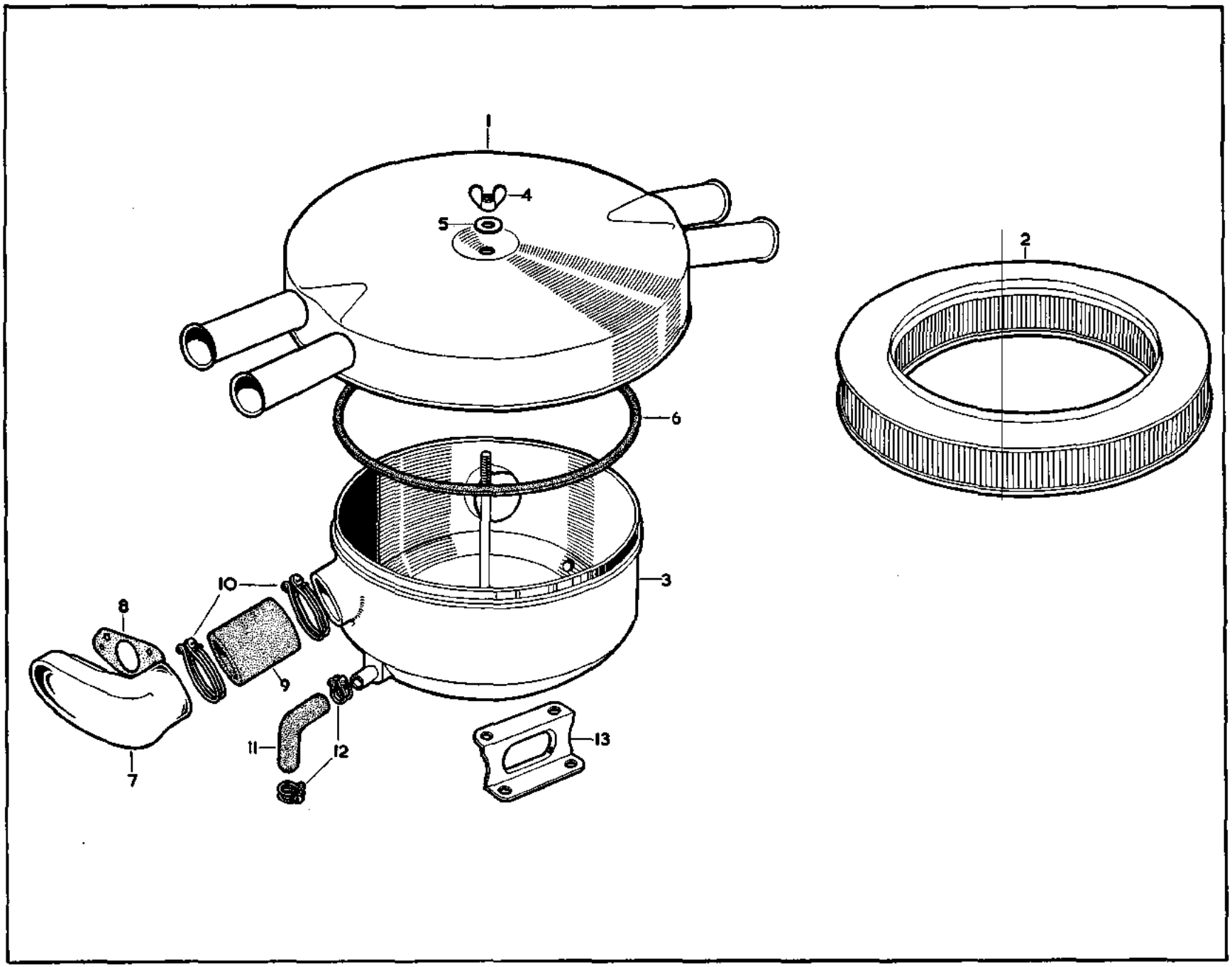

PLATE 7

AUTOMATIC TRANSMISSION UNIT

Part No.	Description	Plate No.	No. per Unit	Remarks
9641	**AUTOMATIC TRANSMISSION ASSEMBLY (J.20-0293) LESS CONVERTER**		1	
C.10986	**CONVERTER ASSEMBLY (FC.15180A)**		1	
8333	**Drain Plug,** for Converter (T.90012)		1	
8334	**Sealing Washer,** on Drain Plug (T.90014)		1	
3701	**TRANSMISSION CASE ASSEMBLY (J.20-504/A)**	9—1	1	
3702	**Stud,** for Transmission Case (J.20—506)		2	
7361	**Oil Seal,** for Selector Control Shaft (J.20-536/A)		1	
6761	**Plug,** (Square Head) under Transmission Case, for Pressure Take-off (JGM.444571)		1	
3740	**DIPSTICK ASSEMBLY (J.20-591)**	9—2	1	
6677	**SELECTOR CONTROL SHAFT ASSEMBLY (J.20-532/A)**	9—3	1	
6679	**Selector Lever,** inside Transmission Case (J.20-537/A)	9—4	1	
5455	**Washer,** Special, on Selector Shaft (J.20-538/B)	9—5	1	
6755	**Washer,** ($\frac{5}{16}$") Plain, on Selector (JGM.103340)		1	
5908	**Washer,** ($\frac{5}{16}$") Spring, on Selector (JGM.103320)		1	
7062	**Nut,** ($\frac{5}{16}$") securing Selector Lever to Control Shaft (JGM.103025)		1	
3750	**TOGGLE ARM LEVER (J.20-630)**	9—6	1	
3751	**Ring,** retaining Toggle Arm Lever in Transmission Case (J.20—633)	9—7	1	

AUTOMATIC TRANSMISSION UNIT

Part No.	Description	Plate No.	No. per Unit	Remarks
6780	**ROD ASSEMBLY, ACTUATING PARKING BRAKE, FROM SELECTOR CONTROL SHAFT TO TOGGLE ARM LEVER (J.20-6441)**	9—8	1	
6772	**Swivel Assembly,** at bottom of Rod (J.20-645)	9—9	1	
6773	**Nut** (JGM.219701)	9—10	1	
3749	**INNER SERVO PISTON ASSEMBLY (J.20-622)**	9—11	3	
5463	**OUTER SERVO PISTON ASSEMBLY (J.20-605/A)**	9—12	2	
3703	**Seal,** for Inner and Outer Servo Pistons (J.20—512)	9—13	5	
5449	**PLATE ASSEMBLY FOR REVERSE SERVO CYLINDER (J.20-519/B)**	9—14	1	
3625	**'O' Ring,** $\frac{1}{2}$" × $\frac{11}{16}$" × $\frac{3}{32}$", on Reverse Cylinder Plate (J.20-120)	9—15	1	
5450	**Gasket,** at Front of Plate (J.20-523/A)	9—16	1	
5447	**Gasket,** at Rear of Plate (J.20-518/A)	9—17	1	
6828	**REVERSE SERVO CYLINDER (J.20-517/D)**	9—18	1	
8434	**Bolt,** $\frac{5}{16}$" × $2\frac{3}{4}$", securing Servo Cylinder to Case (JGM.179829)		3	
8433	**Bolt,** $\frac{5}{16}$" × 2", securing Servo Cylinder to Case (JGM.179826)		2	
8317	**Bolt,** $\frac{5}{16}$" × 1", securing Servo Cylinder to Case (JGM.179818)		1	
5908	**Washer,** $\frac{5}{16}$" Spring, on Bolts (JGM.13320)		6	
9204	**Sealing Ring,** on Bolts (EA.5019)		6	SUPPLIED IN PACK CONTAINING THREE SEALING RINGS
5702	**Plug,** for testing Pressure on Reverse Band (J.20-1103)	9—19	1	
3742	**Washer,** Copper, on Plug (J.20-594)	9—20	1	
6761	**Plug,** for testing Pressure in Converter (JGM.444571)	9—21	1	

AUTOMATIC TRANSMISSION UNIT

Part No.	Description	Plate No.	No. per Unit	Remarks
5451	**SERVO CYLINDER FOR LOW AND FORWARD LOCK-UP BANDS (J.20-525/D)**	9—22	1	
8317	**Bolt,** $\frac{3}{16}$" × 1", securing Servo Cylinder to Transmission Case (JGM.179818)		4	
8433	**Bolt,** $\frac{3}{16}$" × 2", securing Servo Cylinder to Transmission Case (JGM.179826)		5	
5908	**Washer,** $\frac{3}{16}$" Spring, on Bolts (JGM.103320)		9	
9204	**Sealing Rings,** on Bolts (EA.5019)		9	SUPPLIED IN PACK CONTAINING THREE SEALING RINGS.
5702	**Plug,** in Servo Cylinder, for testing Pressure on Low and Forward Bands (J.20-403)	9—23	2	
3742	**Washer,** Copper, on Plugs (J.20-594)	9—24	2	
5444	**PISTON ASSEMBLY FOR LOW LOCK-UP BAND (J.20-513/A)**	9—25	1	
3706	**Seal,** for Piston (J.20-516)	9—26	1	
5712	**PLATE ASSEMBLY FOR LOW BAND SERVO CYLINDER (J.20-5272)**	9—27	1	
3625	**'O' Ring,** $\frac{1}{2}$" × $\frac{11}{16}$" × $\frac{3}{32}$", between Plate and Piston (J.20-120)	9—28	1	
5452	**Gasket,** between Plate and Servo Cylinder (J.20-526/A)	9—29	1	
6684	**Gasket,** between Plate and Transmission Case (J.20-5291)	9—30	1	
3738	**BRAKE BAND ASSEMBLY FOR LOW AND FORWARD GEARS (J.20-581/A) (COMPLETE WITH LININGS)**	9—31	1	
6869	**BRAKE BAND ASSEMBLY FOR REVERSE GEAR (J.20-588/A) (COMPLETE WITH LININGS)**	9—32	1	
3705	**Strut,** for operation of Brake Bands (J.20-514)	9—33	3	
7528	**Screw,** adjusting Low Band (J.20-5242)	9—34	1	
5453	**Screw,** adjusting Forward and Reverse Bands (J.20-513/A)	9—35	2	
5910	**Nut,** locking adjusting Screws (JGM.122295)	9—36	3	

AUTOMATIC TRANSMISSION UNIT

Part No.	Description	Plate No.	No. per Unit	Remarks
5406	**FRONT PUMP AND COLLECTOR RING ASSEMBLY (J.20-105/A)**	10—1	1	
3622	**Collector Ring Assembly** (J.20-108/B)		1	
3627	**Front Pump Assembly** (J.20-149)		1	
3624	**'O' Ring,** Collector Ring and Pump Body $5\frac{1}{2}'' \times 5\frac{3}{4}'' \times \frac{1}{8}''$ (J.20-119)	10—2	1	
3625	**'O' Ring,** on Centre of Collector Ring, $\frac{1}{2}'' \times \frac{11}{16}'' \times \frac{3}{32}''$ (J.20-120)	10—3	1	
3622	**COLLECTOR RING ASSEMBLY (J.20-108/B)**	10—4	1	
3626	**Gasket,** behind Collector Ring (J.20-121)	10—5	1	
3627	**ASSEMBLY OF FRONT PUMP BODY COMPLETE WITH GEARS (J20-149)**	10—6	1	
3623	**Oil Seal,** at Front End of Pump (J.20-116)		1	
3810	**Bolt,** $\frac{1}{4}'' \times 1\frac{3}{4}''$ securing Front Pump to Collector Ring (J.20-102)		1	
8426	**Washer,** $\frac{1}{4}''$ Spring, on Bolt (JGM.103319)		1	
8430	**Bolt,** $\frac{5}{16}'' \times \frac{7}{8}''$, securing Front Pump to Collector Ring (JGM.179817)		2	
8432	**Bolt,** $\frac{5}{16}'' \times \frac{7}{8}''$, securing Front Pump to Collector Ring (JGM.179822)		2	
5908	**Washer,** Spring, on Bolt (JGM.103320)		4	
3677	**Thrust Washer,** controlling End Float on Front Pump and Mainshaft (J.20-388)	10—7	1	**USE THRUST WASHER OF DESIRED THICKNESS TO MAINTAIN CORRECT END FLOAT**
3678	**Thrust Washer,** controlling End Float on Front Pump and Mainshaft (J.20-388/A)	10—7	1	
3679	**Thrust Washer,** controlling End Float on Front Pump and Mainshaft (J.20-388/B)	10—7	1	
3680	**Thrust Washer,** controlling End Float on Front Pump and Mainshaft (J.20-388/C)	10—7	1	
8429	**Bolt,** $\frac{5}{16}'' \times \frac{3}{4}''$, securing Collector Ring to Transmission Case (JGM.179816)		4	
8431	**Bolt,** $\frac{5}{16}'' \times 1\frac{1}{4}''$, securing Collector Ring to Transmission Case (JGM.179820)		3	
5908	**Washer,** $\frac{5}{16}''$ Spring, on Bolts (JGM.103320)		7	
9740	**MAINSHAFT ASSEMBLY, COMPLETE WITH GEAR TRAIN (J.20-30116)**		1	
C.6919	**Tube,** in End of Mainshaft (J.20-392)	10—8	1	
3631	**MAINSHAFT ASSEMBLY LESS GEAR TRAIN (J.20-305)**	10—9	1	
3695	**Piston Ring,** $1'' \times \frac{7}{64}''$, on Mainshaft for Front Planetary Carrier (J.20-413)	10—10	3	

Part No.	Description	Plate No.	No. per Unit	Remarks
5705	**REAR PLANETARY CARRIER ASSEMBLY (J.20-3152)**	10—11	1	
3699	**Washer,** for Rear Planetary Carrier (J.20-423)	10—12	1	
3637	**Thrust Washer,** for Sun Gear (J.20-321)	10—13	1	
3640	**Thrust Washer,** between Ring Gear and Planetary Carrier (J.20-325)	10—14	1	
3638	**Retainer,** securing Planetary Carrier (J.20-322)	10—15	1	
3691	**Piston Ring,** $1\frac{5}{8}'' \times \frac{7}{64}''$, in groove on Retainer (J.20-406)	10—16	1	
3639	**Snap Ring,** securing Retainer (J.20-323)	10—17	1	
5706	**REAR RING GEAR ASSEMBLY (J.20-3262)**	10—18	1	
3689	**'O' Ring,** $1\frac{1}{8}'' \times 1\frac{3}{8}'' \times \frac{1}{8}''$, inside Ring Gear (J.20-401)	10—19	1	
3642	**Piston Ring,** $2\frac{3}{8}'' \times \frac{7}{64}''$, at rear of Ring Gear (J.20-329/A)	10—20	1	
3690	**'O' Ring,** $1\frac{5}{8}'' \times 1\frac{3}{4}'' \times \frac{1}{16}''$, at rear of Ring Gear (J.20-402)	10—21	1	
3656	**Snap Ring,** on splines of Rear Ring Gear (J.20-352)	10—22	1	
5710	**REAR SUN GEAR ASSEMBLY (J.20-3693)**	10—23	1	
3670	**Retainer,** for Rear Sun Gear (J.20-381)	10—24	1	
3669	**Thrust Washer,** for Rear Sun Gear (J.20-380)	10—25	1	
5707	**FRONT SUN GEAR AND LOCK-UP DRUM ASSEMBLY (J.20-3302)**	10—26	1	
3648	**Piston Seal,** 3" diameter (J.20-342)	10—27	1	
3696	**Ring,** for first Clutch Piston (J.20-414)	10—28	1	
3700	**Piston,** complete with ring, for first Clutch Piston (J.20-424)	10—29	1	
3685	**Plate Assembly,** for first Clutch Retractor (J.20-396)	10—30	1	
6683	**Plate,** between Friction Discs (J.20-3461)	10—31	6	
6676	**Friction Disc,** for first Clutch (J.20-3472)	10—32	5	
3653	**Retractor Spring,** operating Friction Discs (J.20-348)	10—33	6	
3697	**Retainer Assembly,** for first Clutch Plate (J.20-417)	10—34	1	
6764	**Snap Ring,** securing Clutch Plates in Lock-up Drum (J.20-3501)	10—35	1	
5415	**Thrust Washer,** for front Sun Gear (J.20-351/A)	10—36	1	
5708	**FRONT PLANETARY CARRIER ASSEMBLY (J.20-3532)**		1	
6853	**Planetary Carrier only** (less Brake Drum) (J.20-3561)	10—37	1	
6619	**Reverse Brake Drum** (J.20-360/A)	10—38	1	
3692	**Snap Ring,** retaining Reverse Brake Drum (J.20-409)	10—39	1	
3660	**Thrust Washer,** for Front Planetary Carrier (J.20-362)	10—40	1	

AUTOMATIC TRANSMISSION UNIT

Part No.	Description	Plate No.	No. per Unit	Remarks
5709	**FRONT RING GEAR ASSEMBLY (J.20-3632)**	10—41	1	
3691	**Piston Ring,** $1\frac{5}{8}$" diameter × $\frac{7}{64}$", for Front Ring Gear (J.20-406)	10—42	3	
9372	**FREEWHEEL UNIT AND LOCK-UP BRAKE DRUM PLATE ASSEMBLY, FOR REVERSE GEAR (J.20-3952)**		1	
5438	**Free Wheel Unit** (Short) (J.20-398/D)	10—43	1	
9373	**Lock-up Plate Assembly** (J.20-3671)	10—44	1	
3665	**Roller,** positioning Brake Drum Plate in Centre Lock-up Drum (J.20-373)	10—45	1	
3654	**Snap Ring,** securing Brake Drum Plate in Centre Lock-up Drum (J.20-350)	10—46	1	
5436	**FREE WHEEL UNIT AND FORWARD BRAKE DRUM ASSEMBLY FOR FORWARD GEARS (J.20-3942)**		1	
7530	**Free Wheel Unit** (Medium) (J.20-3891)	10—47	1	
5433	**Forward Brake Drum** (J.20-328/B)	10—48	1	
3667	**Snap Ring,** internal, securing Free Wheel Unit (J.20—376)	10—49	1	
5711	**Spacer,** behind Medium Free Wheel Unit (J.20-3751)	10—50	1	
3694	**Drive Pin,** retaining Spacer (J.20-411)	10—51	1	
3667	**Snap Ring,** securing Spacer (J.20-376)	10—52	1	
3672	**Bearing,** on Mainshaft, behind Free Wheel Unit (J.20-383)	10—53	1	
3673	**Snap Ring,** on Mainshaft Bearing (J.20-384)	10—54	1	
3671	**Spacer,** behind Mainshaft Bearing (J.20-382)	10—55	1	
3693	**Gear,** on Mainshaft, for Parking Brake (J.20-410)	10—56	1	
3674	**Spacer,** between Parking Gear and Bearing (J.20-385)	10—57	1	
3675	**Gear,** on Mainshaft for Governor Drive (J.20-386)	10—58	1	
3676	**Spacer,** behind Governor Drive Gear (J.20-387)	10—59	1	
9640	**UNIVERSAL JOINT COMPANION FLANGE (J.20-093/B)**	10—60	1	
5439	**Washer,** under Nut (J.20-399/A)	10—61	1	
5926	**Nut,** Self-Locking, securing Companion Flange (JGM.272672)	10—62	1	

AUTOMATIC TRANSMISSION UNIT

Part No.	Description	Plate No.	No. per Unit	Remarks
9643	**VALVE BLOCK ASSEMBLY COMPLETE (J.20-54018)**		1	
6686	**Manifold Plate Assembly** (J.20-5412)		1	
9741	**Base Plate Assembly** (J.20-546/B)	11—1	1	
6565	**Gasket,** between Base Plate and Manifold Plate (J.20-548/A)	11—2	1	
9375	**Relief Valve Body Assembly** (J.20-6121)		1	
6564	**Gasket,** under Relief Valve Body (J.20-551/A)	11—3	1	
5915	**Ball,** $\frac{3}{8}$" diameter for Relief Valve (JGM.147500)	11—4	2	
9742	**Body Assembly,** for Converter and Relay Valve (J.20-56011)		1	
6566	**Gasket,** for Converter Valve Body (J.20-5733)	11—5	1	
6851	**Bolt,** $\frac{1}{4}$" × $2\frac{3}{8}$", for Assembly of Valve Block (J.20-1104)		8	
8424	**Washer,** Wave (J.20-5942)		8	
6757	**Bolt,** $\frac{5}{16}$" × $1\frac{1}{8}$", securing Valve Block to Transmission Case (JGM.106326)		7	
5908	**Washer,** Spring, $\frac{5}{16}$" on Bolts (JGM.103320)		7	
6686	**MANIFOLD PLATE ASSEMBLY (J.20-5412)**	11—6	1	
3721	**Spring,** Selector Valve Detent (J.20-544)	11—7	1	
5914	**Ball,** $\frac{1}{4}$" diameter for Selector Valve (JGM.147485)	11—8	1	
9375	**RELIEF VALVE BODY (J.20-6121)**	11—9	1	
6680	**Retainer,** for Anti-Bump Valve Plug (J.20-570/A)	11—10	1	
6868	**Stop,** for Main Relief Valve (J.20-567/A)	11—11	1	
6771	**Spring,** for Main Relief Valve (J.20-566/A)		1	
9376	**Spring,** for Accumulator Piston (J.20-666)		1	
6682	**Retainer,** for Accumulator Spring (J.20-667)	11—12	1	
6997	**Spring,** for Reverse Interlock (J.20-619)		1	
3732	**Retainer,** for Reverse Interlock Spring (J.20-570)	11—13	1	
9742	**CONVERTER AND RELAY VALVE ASSEMBLY (J.20-56011)**	11—14	1	
6754	**Conterter Shuttle Valve,** Direct (J.20-6381)	11—15	1	
10001	**Convertar Shuttle Valve,** Reverse (J.20-6414)	11—16	1	
6999	**Sleeve,** for Converter Shuttle Valve (J.20-6431)	11—17	1	
6681	**Retainer,** for Shuttle Valve Sleeve (J.20-617/A)	11—18	1	
6773	**Relay Valve** (J.20-677)	11—19	1	
6871	**Plunger,** for Relay Valve (J.20-676)	11—20	1	
6746	**Spring,** operating Relay Valve (J.20-675)	11—21	1	
6781	**End Cover,** for Relay Valve Body (J.20-6791)	11—22	1	
6567	**Gasket,** for End Cover (J.20-6781)	11—23	1	
6760	**Screw and Lockwasher Assembly,** securing End Cover to Relay Valve Body (JGM.216357)		2	

AUTOMATIC TRANSMISSION UNIT

Part No.	Description	Plate No.	No per Unit	Remarks
6688	**OIL FILTER ASSEMBLY (J.20-5571)**	11—19	1	
6873	**Retainer,** for Oil Filter (J.20-558/B)	11—20	1	
6759	**Screw,** securing Retainer (JGM.113954)		1	
9400	**Lockwasher,** on Screw (JGM.114604)		1	
5462	**OIL SUMP (J.20-578/A)**	11—21	1	
3737	**Plug,** in Oil Sump Drain Hole (J.20-580)	11—22	1	
3741	**Washer,** on Plug (J.20-592)	11—23	1	
3736	**Gasket,** between Oil Sump and Transmission Case (J.20-579)	11—24	1	
8973	**Bolt,** $\frac{5}{16}$" × $\frac{5}{8}$", securing Oil Sump to Transmission Case (JGM.106324)		14	
5908	**Washer,** $\frac{5}{16}$" Spring (JGM.103320)		14	
9377	**EXTENSION CASE ASSEMBLY, COMPLETE (J.20-70112)**		1	
7371	**Extension Case Assembly** (J.20-7059)	12—1	1	
3625	**'O' Ring,** on Bush for Governor Adjusting Shaft (J.20-120)	12—2	1	
5469	**Pawl,** Second Speed Drive (J.20-719/A)	12—3	1	
3764	**Washer,** for Control Link and Pawl (J.20-720)	12—4	2	
3765	**Rocker Arm,** for Governor Control (J.20-721)	12—5	1	
3767	**Washer,** behind Rocker Arm (J.20-723)		1	
5688	**Stop,** for Governor (J.20-722/A)	12—6	1	
3768	**Distance Piece,** behind Stop Plate (J.20-724)		1	
3769	**Spring,** operating Governor Control Rocker Arm (J.20-725)	12—7	1	
3808	**Shaft and Lever Assembly,** for Governor Adjustment (J.20-836)	12—8	1	
3770	**Lever,** Governor Adjusting (J.20-728)	12—9	1	
3772	**Finger,** for Governor Adjusting Lever (J.20-7361)	12—10	2	
3771	**Return Spring,** for Governor Adjusting Lever (J.20-735)	12—11	1	
7339	**Valve and Fork Assembly,** for Governor Control (J.20—7902)	12—12	1	
3774	**Detent Piston,** for Governor Control Valve (J.20-744)	12—13	1	
8428	**Screw,** $\frac{1}{4}$" × $\frac{3}{8}$", securing Retainer Plate for Governor Fork (JGM.114354)		1	
8426	**Washer,** $\frac{1}{4}$" Spring, on Screw (JGM.103319)		1	
3796	**Plunger,** in Extension operating Accelerator Detent (J.20-791)	12—14	1	
3797	**Spring,** tensioning Plunger (J.20-792)	12—15	1	
3798	**Gasket,** between Extension and Transmission Case (J.20-793)	12—16	1	
3762	**Oil Seal,** at End of Extension Case (J.20-716)	12—17	1	
5701	**Bolt,** $\frac{3}{8}$" x 3", securing Extension Case (J.20-1101)		1	
5700	**Bolt,** $\frac{3}{8}$" x 2$\frac{1}{2}$", securing Extension Case (J.20-1100)		1	
8435	**Bolt,** $\frac{3}{8}$" x 1", securing Extension Case (JGM.179839)		4	
8427	**Washer,** $\frac{3}{8}$" Spring, on Bolts (JGM.103321)		6	

AUTOMATIC TRANSMISSION UNIT

Part No.	Description	Plate No.	No. per Unit	Remarks
5715	**DETENT CAM CONTROL LINK AND PLUNGER ASSEMBLY OPERATING KICK-DOWN CONTROL (J.20-8301)**	12—18	1	
6758	**Key,** (Woodruff) ½" diameter x $\frac{1}{16}$", positioning Control Shaft to Detent Cam (JGM.106958)	12—19	1	
6889	**Screw,** Set (Allen Head) No. 10 x $\frac{1}{32}$" preventing withdrawal of Shaft from Cam (JGM.140879)	12—20	1	
3771	**Return Spring,** for Detent Cam (J.20-735)	12—11	1	
3793	**Screw,** Set, ¼" x 1¼", for Kick-Down Adjustment (J.20-787)	12—21	1	
6752	**Washer** (Copper) on Setscrew (JGM.446195)	12—22	1	
3794	**Nut,** Stop, for Setscrew (J.20-788)	12—23	1	
5954	**Nut,** Dome, for Setscrew (JGM.441263)	12—24	1	
3787	**GOVERNOR ASSEMBLY (J.20-775)**	12—25	1	
3798	**Bearing,** on Governor Shaft (J.20-778)		1	
3782	**Washer,** (Fibre) on Governor Shaft (J.20-767)		1	
3789	**Snap Ring,** retaining Bearing and Washer on Shaft (J.20-779)		2	
3785	**Shaft,** carrying Governor Assembly (J.20-773/A)	12—26	1	
5714	**Return Spring,** on Governor Shaft (J.20-7843)	12—27	1	
3799	**PAWL AND TOGGLE ASSEMBLY OPERATING PARKING DEVICE (J.20-800)**	12—28	1	
7535	**Pivot Pin,** for Pawl (J.20-8081)	12—29	1	
7536	**Shaft,** supporting Parking Brake (J.20-8051)	12—30	1	
3802	**Ring,** retaining Shaft in Extension (J.20-807)	12—31	1	
3805	**INTERLOCK PISTON ASSEMBLY FOR PARKING BRAKE (J.20-810)**	12—32	1	
3806	**Spring,** for Parking Brake Interlock Piston (J.20-813)	12—33	1	
3783	**HOUSING FOR SPEEDOMETER DRIVE GEAR (J.20-770)**	12—34	1	
3786	**Gasket,** between Housing and Extension (J.20-774)	12—35	1	
3792	**Cover,** for Housing (J.20-786)	12—36	1	
3791	**Gasket,** between Housing and Cover (J.20-785)	12—37	1	
432853	**Stop Plate,** restricting Reverse Gear Operating Lever	12—38	1	
8483	**Bolt,** $\frac{5}{16}$" x 2", securing Housing and Stop Plate (JGM.179826)		2	
5908	**Washer,** $\frac{5}{16}$" Spring (JGM.103320)		2	

AUTOMATIC TRANSMISSION UNIT

Part No.	Description	Plate No.	No. per Unit	Remarks
3784	**SPEEDOMETER DRIVE GEAR (J.20-772/A)**	12—39	1	
8852	**REAR PUMP ASSEMBLY (J.20-7508)**		1	
8382	**Body only,** for Rear Pump (J.20-7514)	12—40	1	
5690	**Driving Gear,** and Shaft Assembly (J.20-755)	12—41	1	
5691	**Idler Gear Assembly** (J.20-758)	12—42	1	
C.12645	**Cover,** for Rear Pump (J.20-7624)	12—43	1	
8854	**Gasket,** (.002" thick) under Cover (Coloured Red or Clear) (J.20-7611)	12—44	1	**SELECTIVE RANGE, FOR CLEARANCE BETWEEN COVER AND GEARS.**
8855	**Gasket** (.003" thick) under Cover (Coloured Clear) (J.20-7611/A)	12—44	1	
8856	**Gasket** (.005" thick) under Cover (Coloured Opaque Blue or Black) (J.20-7611/B)	12—44	1	
8857	**Gasket** (.006" thick) under Cover (Coloured Manilla) (J.20-7611/C)	12—44	1	
8858	**Gasket** (.008" thick) under Cover (Coloured Manilla) (J.20-7611/D)	12—44	1	
8422	**Bolt,** $\frac{1}{4}$" × $\frac{7}{8}$" securing Rear Pump to Extension (J.20-1108)		2	
8426	**Washer,** $\frac{1}{4}$" Spring, on Bolts (JGM.103319)		2	
5693	**Governor Driven Gear** (J.20-765)	12—45	1	
6756	**Pin,** securing Governor Driven Gear (JGM.103723)	12—46	1	
8853	**Gasket,** between Rear Pump and Extension (J.20-7664)	12—47	1	
8318	**Bolt,** $\frac{5}{16}$" × $2\frac{1}{4}$", securing Rear Pump to Extension (JGM.179827)		3	
5908	**Washer,** $\frac{5}{16}$" Spring, on Bolts (JGM.103320)		3	
7341	**Plug,** in Rear Pump Cover (JGM.444732)		2	
UFB.125/8R	**Bolt,** securing Cover to Rear Pump		2	
432225	**SPEEDOMETER DRIVEN GEAR ASSEMBLY**	12—48	1	
C.17678	**GUIDE TUBE AND BELLOWS ASSEMBLY FOR INTERMEDIATE SPEED HOLD**	12—49	1	
C.12635	**Connecting Pin,** for Guide Tube	12—50	1	
AG.102/X	**Washer,** Spring, on Connecting Pin	12—51	1	
C.17681	**PLUNGER ROD, FOR SOLENOID**	12—52	1	
C.12634	**Copper Washer,** between Plunger Rod and Guide Tube	12—53	1	
C.12638	**SPRING, ON PLUNGER ROD**	12—54	1	
C.17680	**Seating Washer,** for Spring	12—55	1	

AUTOMATIC TRANSMISSION UNIT

Part No.	Description	Plate No.	No. per Unit	Remarks
C.12642	**BRACKET MOUNTING SOLENOID FOR INTERMEDIATE SPEED HOLD**	12—56	1	
C.17710	**'O' Ring**, in Solenoid Mounting Bracket	12—57	1	
C.17673	**SOLENOID, FOR INTERMEDIATE SPEED HOLD (76533/A)**	12—58	1	
UFS.319/3H	**Screw**, Set, securing Solenoid		2	
AG.102/X	**Washer**, Spring, on Setscrews		2	
UFN.225/L	**Locknut**, for adjustment of Solenoid Plunger	12—59	1	
UCR.131/20R	**Bolt**, securing Solenoid Mounting Bracket and Rear Pump Cover		1	
309153	**CABLE FOR INTERMEDIATE SPEED HOLD**		1	
9985	**REPAIR KIT FOR MULTI-DISC CLUTCH (J.20-0986)**		1	
	consisting of :—			
6683	**Clutch Plate**		6	
6676	**Friction Disc**		5	
3653	**Retractor Spring**		12	
6764	**Snap Ring**		1	
3648	**Piston Seal**		1	
8783	**THRUST WASHER KIT (J.20-099)**		1	
	consisting of :—			
3637	**Thrust Washer**		1	
3677	**Thrust Washer**		1	
3678	**Thrust Washer**		1	
3679	**Thrust Washer**		1	
3649	**Thrust Washer**		1	
3669	**Thrust Washer**		1	
5415	**Thrust Washer**		1	
3660	**Thrust Washer**		1	
3680	**Thrust Washer**		1	
6767	**COMPLETE SET OF SEALS FOR USE WHEN OVERHAULING TRANSMISSION UNIT**		1	
7476	**GASKET SET, FOR USE WHEN OVERHAULING TRANSMISSION UNIT**		1	

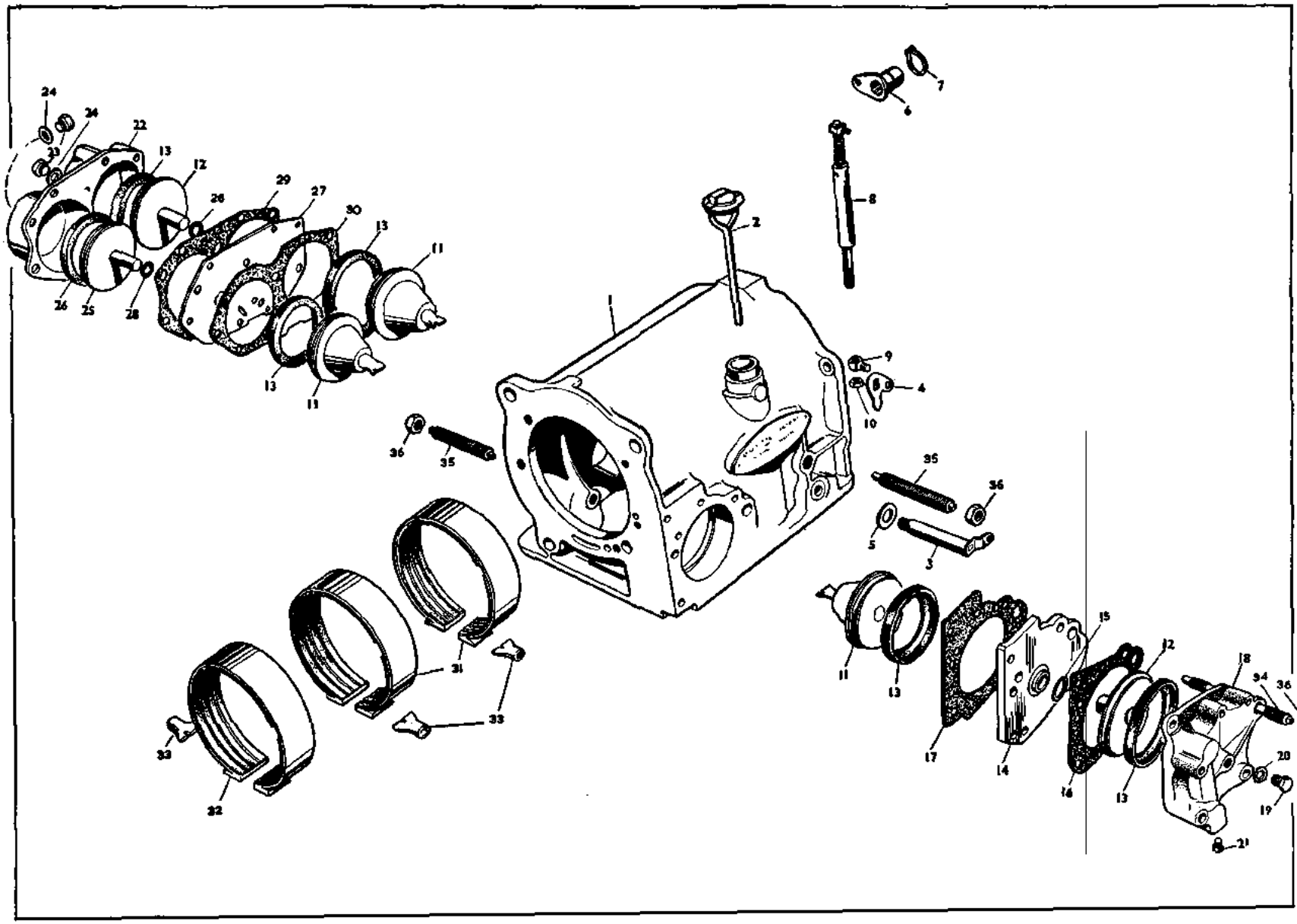
24
23
34
22
13
12
29
27
26
30
13
11
26
25
28
13
11
7
6
8
2
9
4
10
36
35
35
36
5
3
11
13
15
12
18
34
36
17
14
14
13
20
19
21
31
33
33
32

PLATE 9

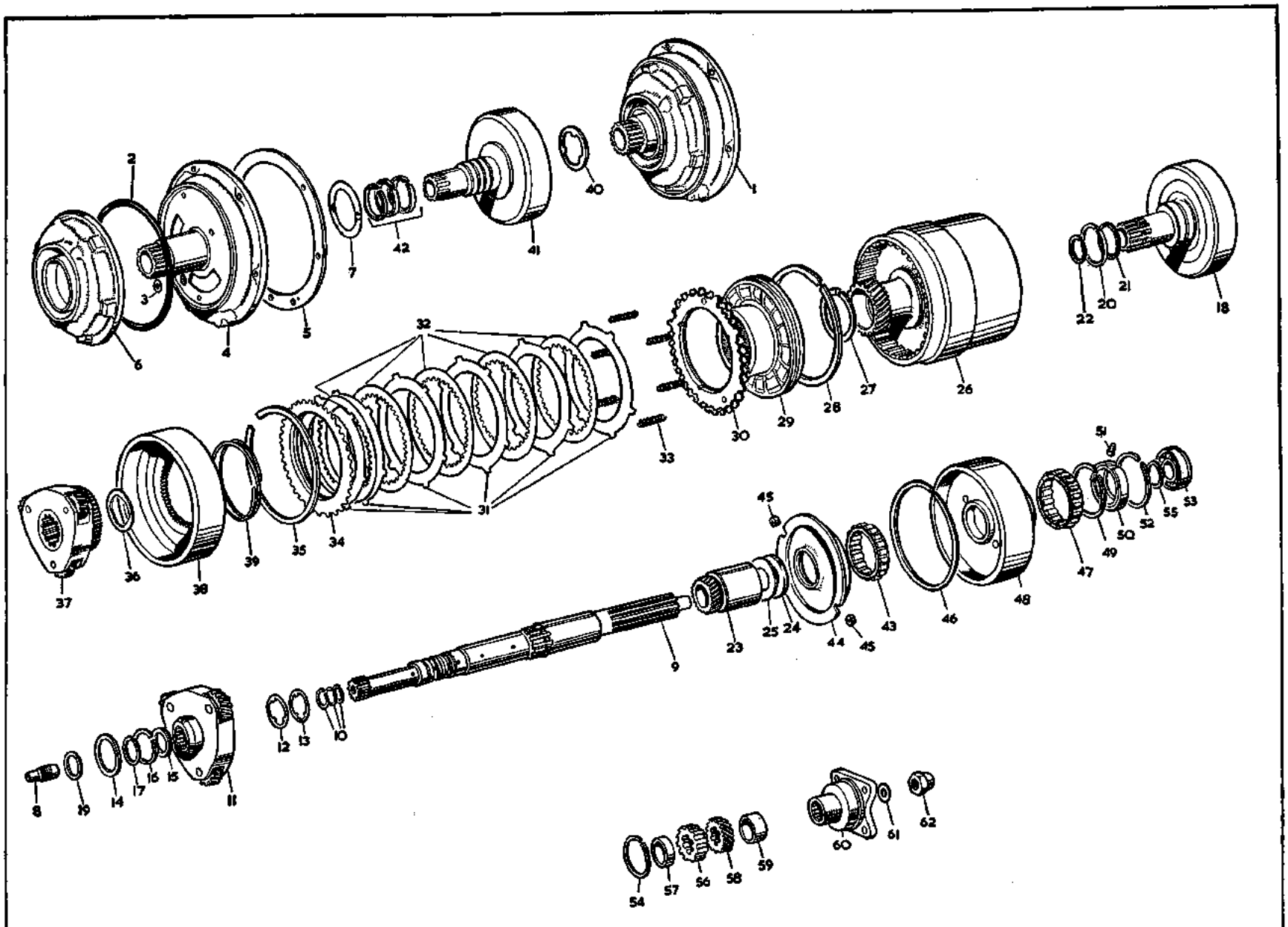
1
2
3
4
5
6
7
8
9
10
11
12
13
14
15
16
17
18
19
20
21
22
23
24
25
26
27
28
29
30
31
32
33
34
35
36
37
38
39
40
41
42
43
44
45
46
47
48
49
50
51
52
53
54
55
56
57
58
59
60
61
62

PLATE 10

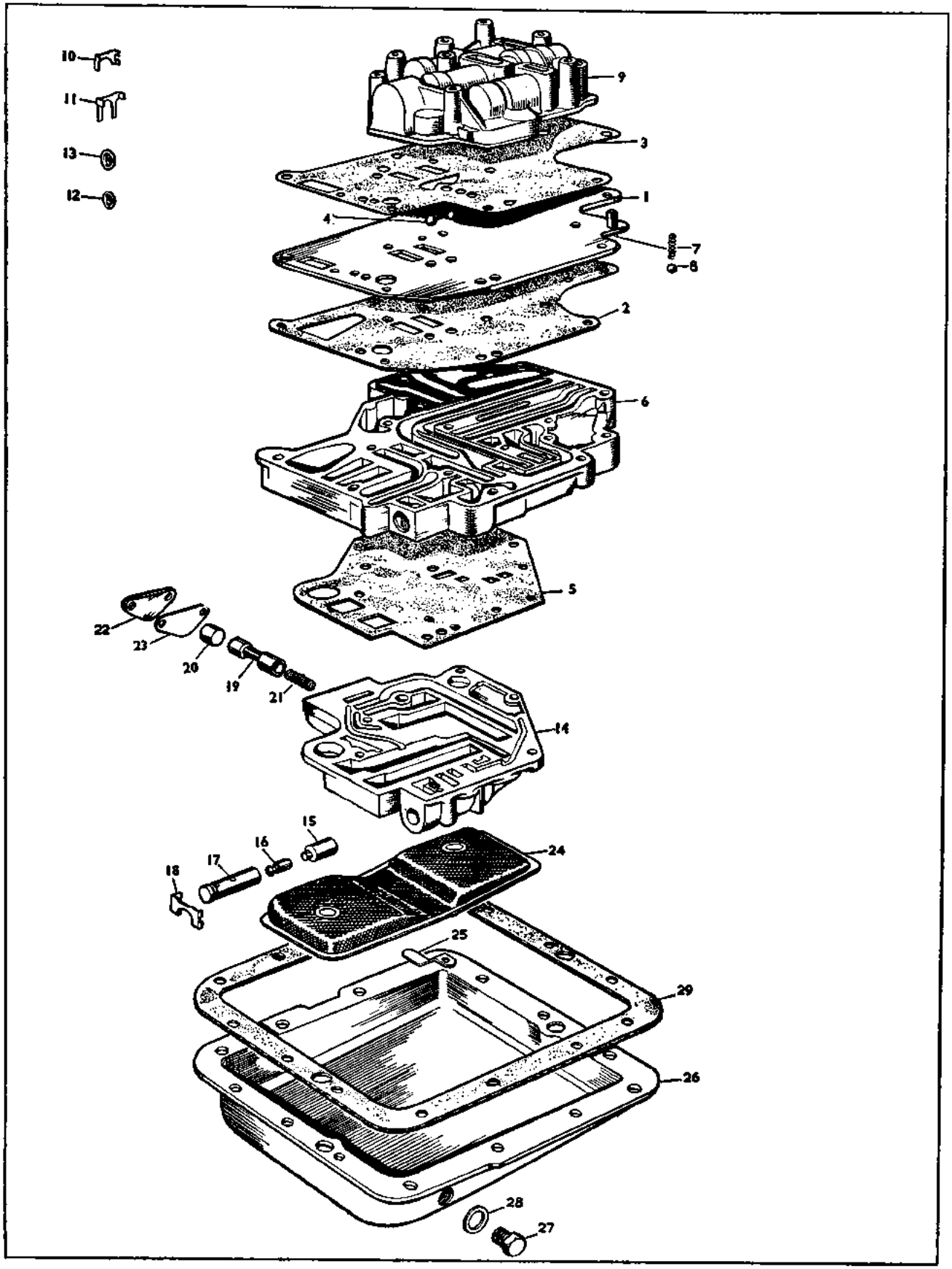

PLATE 11

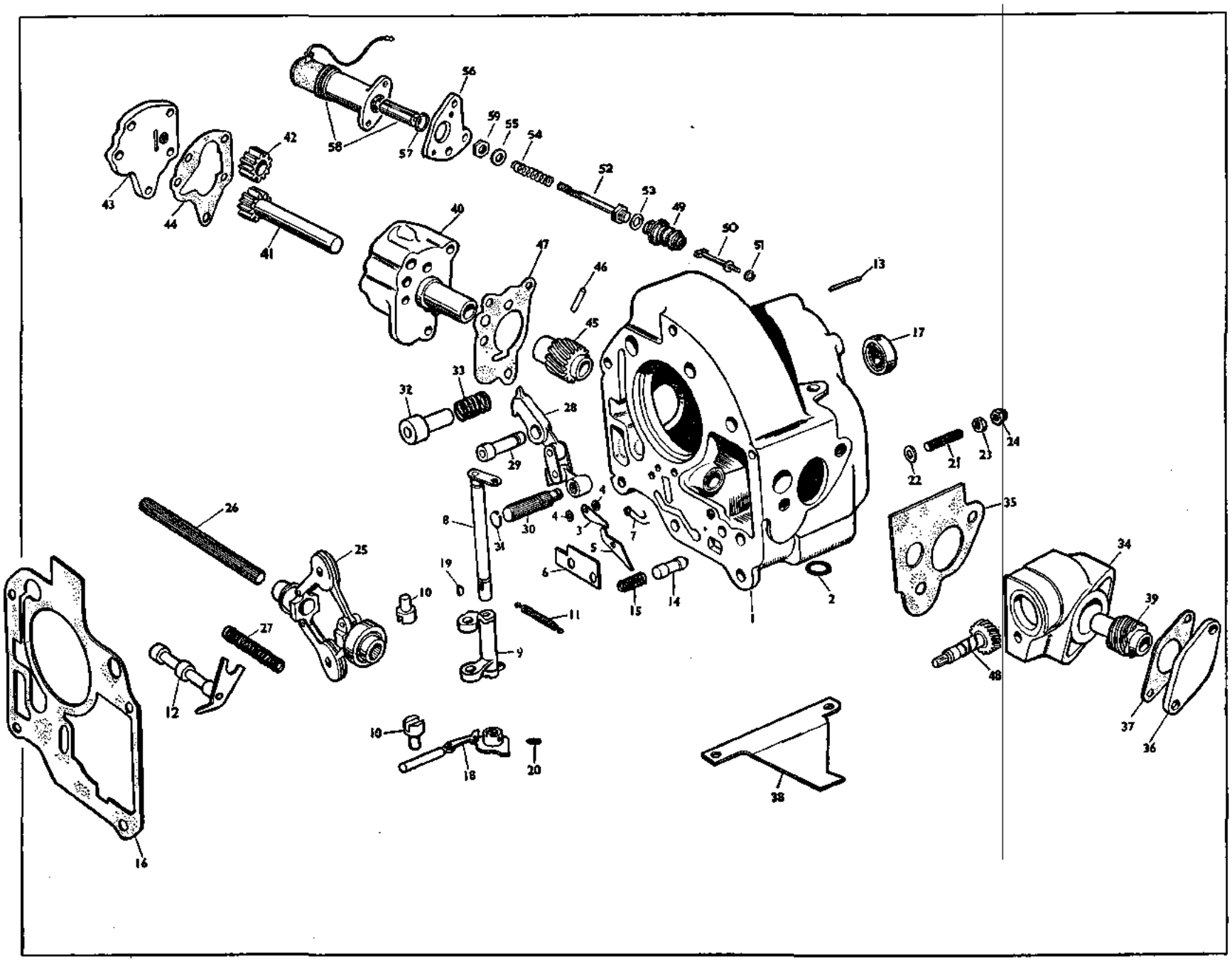
1
2
3
4
5
6
7
8
9
10
11
12
13
14
15
16
17
18
19
20
21
22
23
24
25
26
27
28
29
30
31
32
33
34
35
36
37
38
39
40
41
42
43
44
45
46
47
48
49
50
51
52
53
54
55
56
57
58
59

PLATE 12

AUTOMATIC TRANSMISSION MOUNTING DETAILS

Part No.	Description	Plate No.	No. per Unit	Remarks
308450	**CONVERTER HOUSING ASSEMBLY**	13—1	1	
420304	**Dowel**, for Converter Housing	13—2	1	
34007/16	**Stud**, for Converter Housing	13—3	2	
13107	**Nut**, securing Converter Housing and Gearbox		4	
430241/07	**Washer**, Spring, under Nuts		4	
307193	**Cover Plate**, for Air Outlet	13—4	2	
432864	**Cover Plate**, for Air Inlet	13—5	2	
422545/13	**Screw**, securing Cover Plates		12	
430241/03	**Washer**, Spring, on Screws		12	
307170	**STARTER GEAR RING**	13—6	1	
135832	**Mounting Plate**, for Starter Gear Ring	13—7	1	
430205	**Screw** (Long) securing Starter Gear Ring to Mounting Plate	13—8	6	
430206	**Screw** (Short) securing Starter Gear Ring to Mounting Plate	13—9	2	
430241/06	**Washer**, Spring, on Screws	13—10	8	
307226	**Spacing Washer**, for Mounting Plate	13—11	2	
430239	**Bolt**, for Crankshaft Flange	13—12	6	
430237	**Lockplate**, on Bolts	13—13	3	
22105/12	**Screw**, Set, securing Converter Housing Support Plate to Cylinder Block		7	
11105/11	**Bolt**, securing Converter Housing to Support Plate		6	
13105	**Nut**, on Bolts		6	
430241/05	**Washer**, Spring, on Setscrews and Bolts		13	

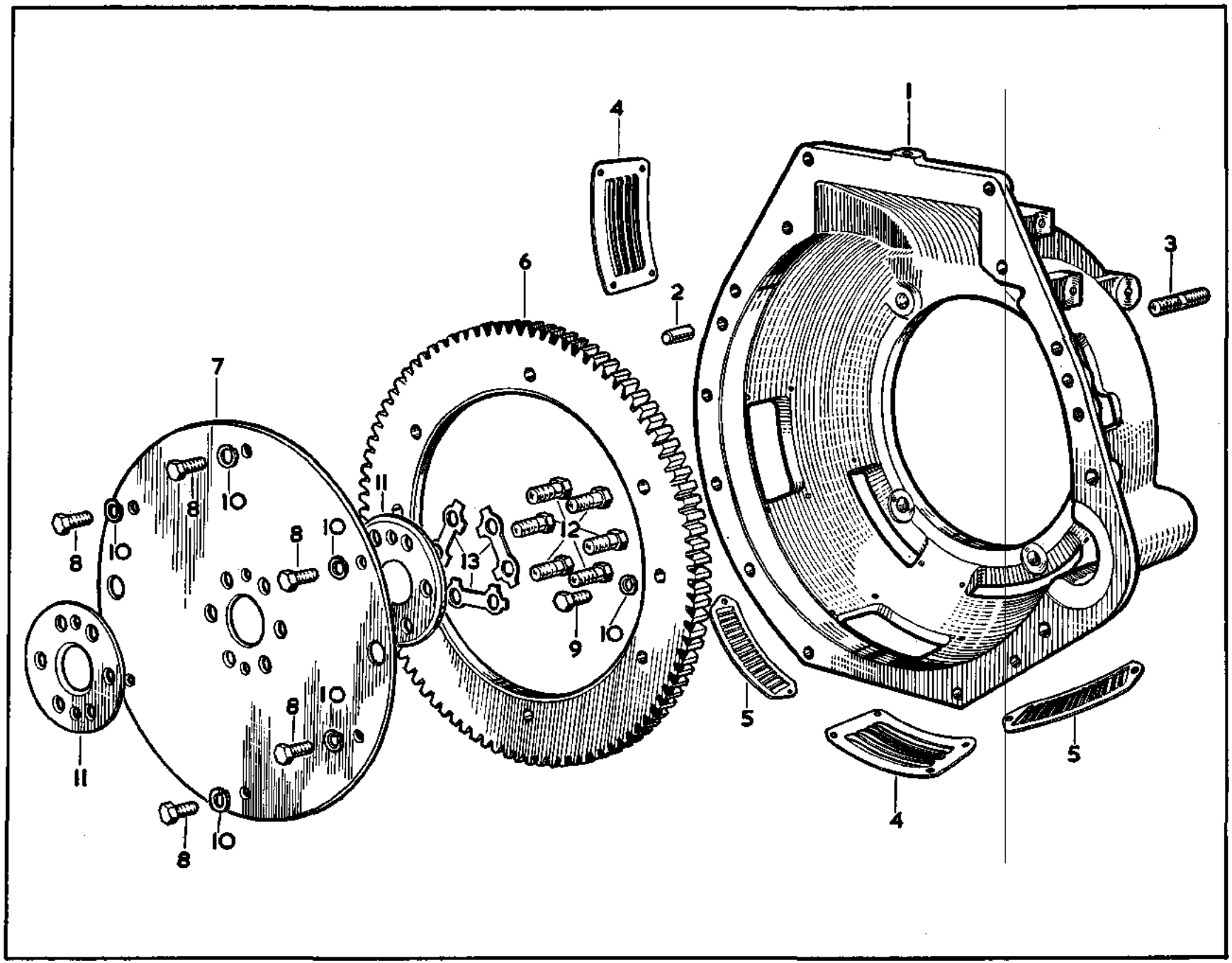

PLATE 13

Part No.	Description	Plate No.	No. per Unit	Remarks
136520	**FRONT PROPELLER SHAFT ASSEMBLY (60-0671)**		1	**DQ.450/1 ONLY**
136593	**FRONT PROPELLER SHAFT ASSEMBLY (045/500713)**		1	**DR.450/1 ONLY**
134822/01	**Flange Yoke** (K.3-2-119 or 045/202038)	14—1	1	
7152	**Journal Assembly,** connecting Yokes to Propeller Shaft (K.5-GB.18 or 045/500423)	14—2	1	
134822/03	**Grease Nipple,** on Journal (94-GB.2459 or 245065)	14—3	1	
134822/04	**Flange,** at Rear of Propeller Shaft (K.3-1-GB.4031 or 045/200018)	14—4	1	
134822/05	**Distance Collar,** on Shaft Spline (94-GB.2222 or 245362)	14—5	1	
113	**Nut,** Slotted, securing Flange and Collar to Rear of Front Propeller Shaft (12-74-GB.161 or 245364)	14—6	1	
134822/06	**Washer,** under Nut (12-75-GB.39 or 245363)	14—7	1	
73	**Split Pin,** retaining Nut (8-72-59)	14—8	1	
136519	**CENTRE BEARING HOUSING**		1	Fitted from Chassis No. 136711 to 137168 DQ.450 And to all DQ.451 and from 136011 to 136055 DR.450/1
308901	**Cover,** for Centre Bearing Housing		1	
12105/07	**Bolt,** securing Cover to Housing		4	
430241/05	**Washer,** Spring, on Bolts		4	
422521/29	**Grease Nipple,** on Centre Bearing Housing		1	
432154/09	**Bearing,** in Housing, for Front Propeller Shaft (LS.13)		1	
432867	**Grease Seal,** Aluminium, for Bearing		2	
136666	**CENTRE BEARING HOUSING**	14—9	1	Fitted to Chassis No. 137169 and subs. DQ.450 136056 and subs. DR.450/1
309176	**Cover,** for Centre Bearing Housing	14—10	1	
12105/07	**Bolt,** securing Cover to Housing		4	
430241/05	**Washer,** Spring, on Bolts		4	
432961	**Bearing** (Sealed) in Housing, for Front Propeller Shaft (LS.13-RSV.3)	14—11	1	
309175	**Water Seal,** Aluminium, for Bearing	14—12	2	
432952	**Rubber Ring** on Shaft	14—13	1	
426808	**Buffer Pin,** on Centre Bearing Housing Cover	14—14	1	
13106	**Nut,** securing Buffer Pin to Cover		1	
430241/06	**Washer,** Spring, under Nut		1	
432736	**Bolt,** securing Centre Bearing Housing to Support Bracket	14—15	2	
432601	**Support Rubber,** for Centre Bearing Housing, on Bolts	14—16	4	
432496	**Washer** (Bottom) retaining Support Rubbers	14—17	2	
422514/07	**Nut,** Nyloc, on Bolts		2	
422500/03	**Washer,** Plain, under Nuts		2	
136596	**SUPPORT BRACKET FOR CENTRE BEARING HOUSING**	14—18	1	**DQ.450/1 ONLY**

PROPELLER SHAFT

Part No.	Description	Plate No.	No. per Unit	Remarks
136590	**SUPPORT BRACKET FOR CENTRE BEARING HOUSING**		1	**DR.450/1 ONLY.**
11105/06	**Bolt,** securing Support Bracket to Frame		4	
13105	**Nut,** on Bolts		4	
422500/02	**Washer,** Plain, on Bolts		4	
430241/05	**Washer,** Spring, under Nuts		4	
432742	**BUFFER ADJUSTMENT FLANGE AND RUBBER ASSEMBLY**	14—19	1	
12104/06	**Bolt,** securing Buffer Assembly to Centre Bearing Housing Support Bracket		2	
422514/05	**Nut,** Nyloc, on Bolts		2	
422500/01	**Washer,** Plain, under Nuts		2	
136483	**REAR PROPELLER SHAFT ASSEMBLY (60-0670)**		1	**DQ.450/1 ONLY.**
134822/01	**Flange Yoke** (K3-2-119)	14—20	2	
134834/01	**Sleeve Yoke** (K.3-3-598X)	14—21	1	
7152	**Journal Assembly,** connecting Yokes to Propeller Shaft (K.5-GB.18)	14—22	2	
134822/03	**Grease Nipple,** on Journals (94-GB.2459)	14—23	2	
26	**Dust Cap,** for Sleeve Yoke (3-14-39)	14—24	1	
134834/02	**Washer** (Cork) inside Dust Cap (K3-16-53)	14—25	1	
134834/03	**Washer,** (Steel) inside Dust Cap (3-15-53)	14—26	1	
8406	**Grease Nipple,** on Sleeve Yoke (94—GB.2204)	14—27	1	
136594	**REAR PROPELLER SHAFT ASSEMBLY (045/702301)**		1	**DR.450/1 ONLY.**
134822/01	**Flange Yoke** (045/202038)	14—20	2	
9925	**Sleeve Yoke** (045/500497)	14—21	1	
7152	**Journal Assembly,** connecting Yokes to Propeller Shaft (045/500423)	14—22	2	
134822/03	**Grease Nipple,** on Journals (245065)	14—23	2	
9926	**Dust Cap,** for Sleeve Yoke (05/245052)	14—24	1	
9927	**Washer** (Cork) inside Dust Cap (05/245053)	14—25	1	
9928	**Washer** (Steel) inside Dust Cap (05/245054)	14—26	1	
8406	**Grease Nipple,** on Sleeve Yoke (245068)	14—27	1	
430283	**Bolt,** securing Flanges		8	
422514/08	**Nut,** Nyloc, on Bolts		12	

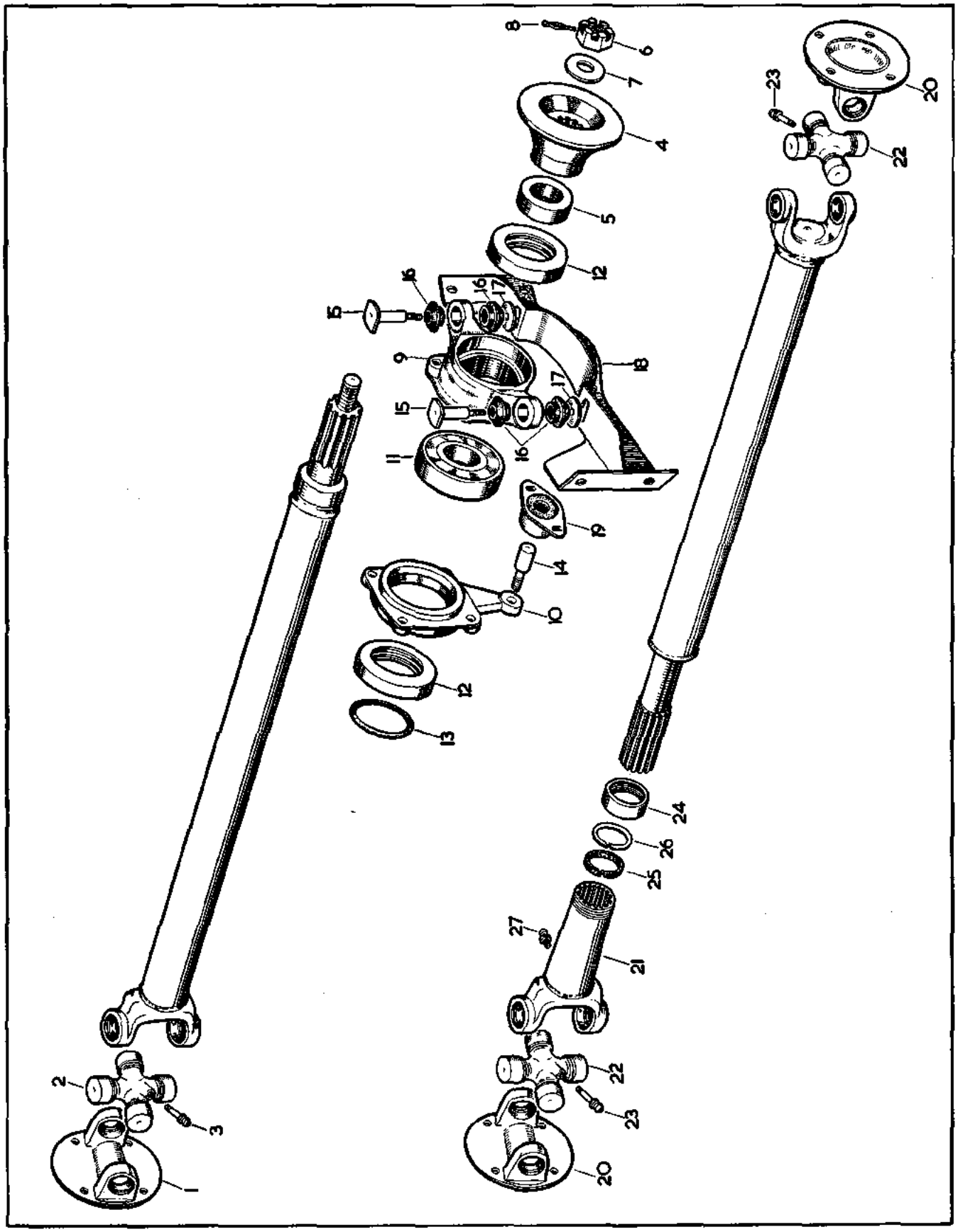
8
6
7
4
5
12
16
17
15
9
18
15
16
17
11
19
14
10
12
13
23
20
22
24
26
25
27
21
22
23
20
2
3
1

PLATE 14

Fitted from Chassis No. 136711 to 137257. DQ.450. And to all DQ.451. 136011 to 136018 DR.450/1

Part No.	Description	Plate No.	No. per Unit	Remarks
26250	**REAR AXLE ASSEMBLY (RATIO 3.77:1)**		1	**R.H. DRIVE CARS ONLY**
26238/01	**Carrier and Tube Assembly** (4HA-101-45)	15—1	1	
74	**Screw,** Set, securing Differential Bearing Caps (8B-NC.36)	15—2	4	
C.728	**Washer,** Shakeproof, on Setscrews (8LW-115)	15—3	4	
3930	**Cover,** for Carrier (4HA-010)	15—4	1	
3823	**Plug,** for Filler and Drain Apertures (HA-059)	15—5	2	
3931	**Gasket,** for Cover (4HA-026)	15—6	1	
CS.131/5D	**Screw,** Set, securing cover (5B-NC.10)	15—7	10	
47	**Lock Washer,** on Setscrews (5LW-95)	15—8	10	
6312	**Differential Assembly** (4HA-082-7)		1	
3845	**Roller Bearing,** on Differential Case (Timken 24780-24721) (2HA-024)	15—9	2	
3935	**Shim,** adjusting Differential (.003" thick) (4HA-046)	15—10	As req'd	**USE SHIM OF DESIRED THICKNESS**
3936	**Shim,** adjusting Differential (.005" thick) (4HA-047)	15—10	As req'd	
3937	**Shim,** adjusting Differential (.010" thick) (4HA-048)	15—10	As req'd	
3938	**Shim,** adjusting Differential (.030" thick) (4HA-049)	15—10	As req'd	
6306	**Crown Wheel and Pinion** (4HA-105-7A)	15—11	1	
6301	**Screw,** Set, securing Crown Wheel to Differential Case (3HA-075-6)	15—12	10	
6316	**Lock Strap,** securing Crown Wheel Setscrews (4HA-074-2)	15—13	5	
3844	**Roller Bearing,** at Inner End of Pinion (Timken 31593-31520) (2HA-023)	15—14	1	
3860	**Shim,** inner, adjusting Pinion (.003" thick) (2HA-043)	15—15	As req'd	**USE SHIM OF DESIRED THICKNESS**
3861	**Shim,** inner, adjusting Pinion (.005" thick (2HA-044)	15—15	As req'd	
3862	**Shim,** Inner, adjusting Pinion (.010" thick) (2HA-045)	15—15	As req'd	
8029	**Distance Washer,** behind Outer Pinion Shims (4HA-115)	15—15A	1	
3856	**Shim,** outer, adjusting Pinion (.003" thick) (2HA-039)	15—16	As req'd	**USE SHIM OF DESIRED THICKNESS**
3857	**Shim,** outer, adjusting Pinion (.005" thick) (2HA-040)	15—16	As req'd	
3858	**Shim,** outer, adjusting Pinion (.010" thick) (2HA-041)	15—16	As req'd	
3859	**Shim,** outer, adjusting Pinion (.030" thick) (2HA-042)	15—16	As req'd	
3843	**Roller Bearing,** at outer end of Pinion (Timken 02872-02820) (2HA-022)	15—17	1	
3934	**Oil Slinger,** on Pinion (4HA-036)	15—18	1	
3840	**Oil Seal,** on Pinion (2HA-019)	15—19	1	
3841	**Gasket,** for Pinion Oil Seal (2HA-020)	15—20	1	
3954	**Companion Flange Assembly** (5HA-083-1)	15—21	1	
115	**Nut,** securing Companion Flange to Pinion (12LN-NF.9)	15—22	1	
114	**Washer,** under Nut (12W-24)	15—23	1	
C.970/1	**Grease Nipple,** on Axle Tubes (NA.6653)	15—24	2	
26238/23	**Axle Shaft** (4HA-005-48)		2	
26251	**REAR AXLE ASSEMBLY (RATIO 3.77 : 1)**		1	**L.H. DRIVE CARS ONLY**
26239/01	**Carrier and Tube Assembly** (4HA-101-46)		1	
	All other items as for Rear Axle Assembly 26250.			
6312	**DIFFERENTIAL CASE ASSEMBLY (4HA-082/7)**		1	
6314	**Case only,** for Differential (4HA-006/5)	15—25	1	
3929	**Gear,** side, for Differential (4HA-007)	15—26	2	
3855	**Thrust Washer,** for Side Gears (2HA-038)	15—27	2	
3835	**Gear,** Differential Pinion Mate (2HA-008/1)	15—28	2	
3854	**Thrust Washer,** for Pinion Mate Gears (2HA-037)	15—29	2	
3837	**Shaft,** for Pinion Mate Gears (2HA-012)	15—30	1	
3932	**Spacer,** on Shaft (4HA-033)	15—31	1	
3838	**Pin,** locking Pinion Mate Gear Shaft in Differential (2HA-013)	15—32	1	

REAR AXLE

Fitted from Chassis No. 136711 to 137257. DQ.450. And to all DQ.451. 136011 to 136018 DR.450/1

Part No.	Description	Plate No.	No. per Unit	Remarks
26238/23	**REAR AXLE SHAFT (4HA-005-48)**	15—33	2	
C.7356	**Key**, locating Hubs on Axle Shafts (2HA-029)	15—34	2	
3848	**Oil Seal**, in Carrier Tube for Axle Shafts (2HA-027)	15—35	2	
26238/25	**Roller Bearing**, for Hubs (4HA-025/4)	15—36	2	
131	**Nut**, Slotted, securing Hubs to Axle Shafts (16SN-NF.10)	15—37	2	
133	**Washer**, under Slotted Nut (16W-31)	15—38	2	
L.104/14U	**Split Pin**, retaining Nuts (8SP-14)	15—39	2	
308131	**REAR CALIPER SUPPORT BRACKET**	15—40	2	
134502/01	**Bolt**, securing Brackets to Axle (6B-NF.19)		10	
26223/19	**Nut**, on Bolts (6LN-NF.6B)		10	
134502/03	**Lockwasher**, under Nuts (6W-12)		10	
3867	**Shim**, (.003" thick) adjusting Hub Bearings (2HA-050)		As req'd	**USE SHIMS OF DESIRED THICKNESS**
3868	**Shim**, (.005" thick) adjusting Hub Bearings (2HA-051)		As req'd	
3869	**Shim**, (.010" thick) adjusting Hub Bearings (2HA-052)		As req'd	
3870	**Shim**, (.030" thick) adjusting Hub Bearings (2HA-053)		As req'd	
7955	**REAR HUB OIL SEAL (4HA-057-5)**	15—41	2	
C.1483	**Gasket**, behind Oil Seal (2HA-031)		2	
308365	**R.H. REAR HUB ASSEMBLY**	15—42	1	
430261	**Stud**, R.H. in Hub, fixing Road Wheels		5	
422753	**Nut**, on Studs, securing Road Wheels	15—43	5	
308366	**L.H. REAR HUB ASSEMBLY**		1	
431019	**Stud**, L.H. in Hub, fixing Road Wheels		5	
431021	**Nut**, on Studs, securing Road Wheels		5	

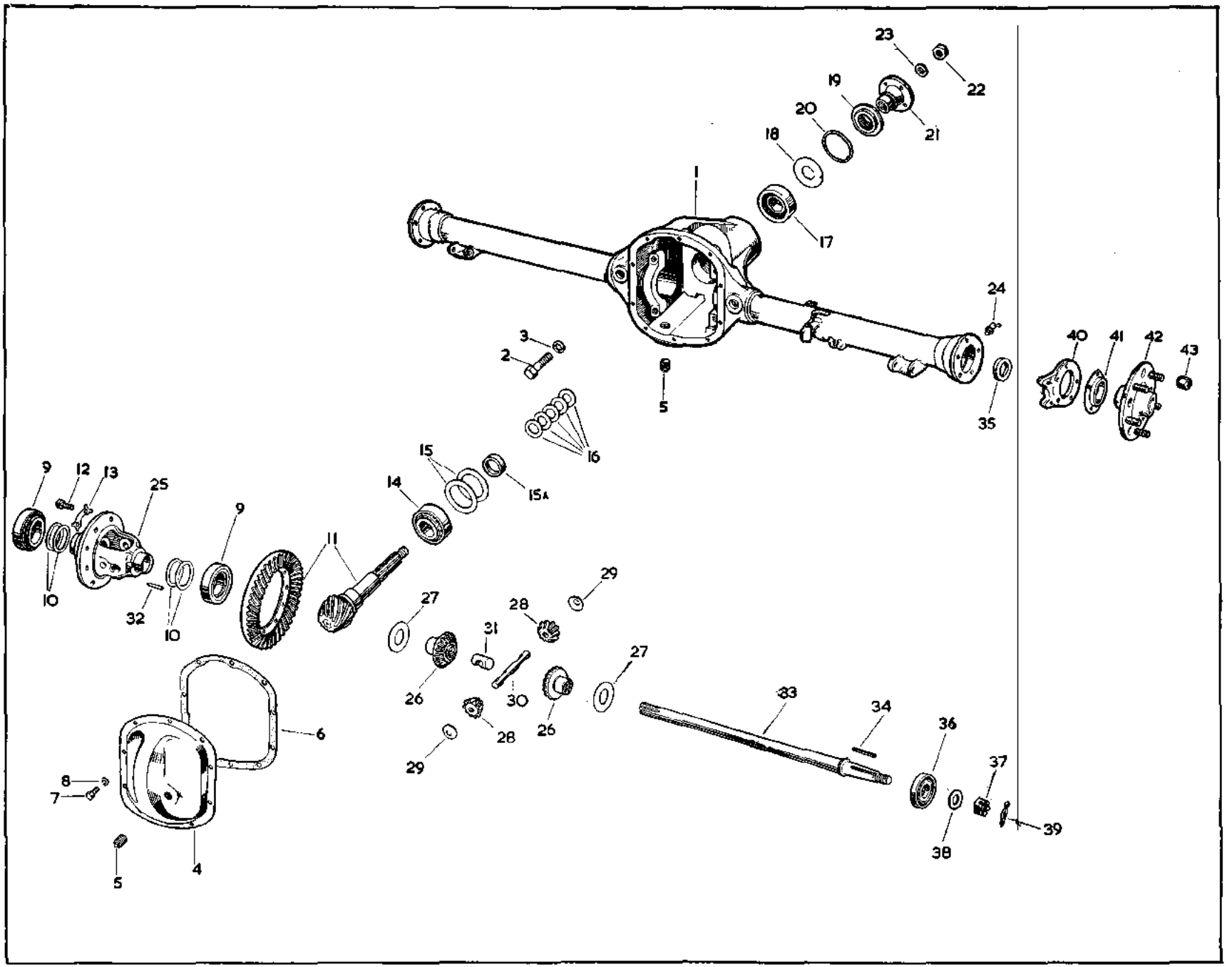
1
2
3
4
5
6
7
8
9
10
11
12
13
14
15
15A
16
17
18
19
20
21
22
23
24
25
26
27
28
29
30
31
32
33
34
35
36
37
38
39
40
41
42
43

PLATE 15

REAR AXLE

Fitted to Chassis No. 137258 and subs. DQ.450
136019 and subs. DR.450/1

Part No.	Description	Plate No.	No. per Unit	Remarks
26274	**REAR AXLE ASSEMBLY (RATIO 3.77 : 1) (4HA-001-112)**		1	**R.H. DRIVE CARS ONLY**
9029	**Carrier and Tube Assembly** (4HA-101-61)	16—1	1	
74	**Screw,** Set, securing Differential Bearing Caps (8B-NC-36)	16—2	4	
C.728	**Washer,** Shakeproof, on Setscrews (8LW-115)	16—3	4	
3930	**Cover,** for Carrier (4HA-010)	16—4	1	
3823	**Plug,** for filler and drain Apertures (4HA-059)	16—5	2	
3931	**Gasket,** for Cover (4HA-026)	16—6	1	
CS.131/5D	**Screw,** Set, securing Cover (5B-NC-95)	16—7	10	
47	**Lockwasher,** on Setscrews (5LW-95)	16—8	10	
7380	**Differential Assembly** (4HA-082-11)		1	
3845	**Roller Bearing,** on Differential Case (Timken 24780-24721) (2HA-024)	16—9	1	
3935	**Shim,** adjusting Differential (.003" thick) (4HA-046)	16—10	As req'd	**USE SHIM OF DESIRED THICKNESS.**
3936	**Shim,** adjusting Differential (.005" thick) (4HA-047)	16—10	As req'd	
3937	**Shim,** adjusting Differential (.010" thick) (4HA-048)	16—10	As req'd	
3938	**Shim,** adjusting Differential (.030" thick) (4HA-049)	16—10	As req'd	
6306	**Crown Wheel and Pinion** (4HA-105-7A)	16—11	1	
6301	**Screw,** Set, securing Crown Wheel to Differential Case (3HA-075-6)	16—12	10	
7384	**Lockstrap,** securing Crown Wheel Setscrews (4HA-074-4)	16—13	5	
3844	**Roller Bearing,** at Inner end of Pinion (Timken 31593-31520) (2HA-023)	16—14	1	
3860	**Shim,** inner, adjusting Pinion (.003" thick) (2HA-043)	16—15	As req'd	**USE SHIM OF DESIRED THICKNESS.**
3861	**Shim,** inner, adjusting Pinion (.005" thick) (2HA-044)	16—15	As req'd	
3862	**Shim,** inner, adjusting Pinion (.010" thick) (2HA-045)	16—15	As req'd	
8029	**Distance Washer,** behind Outer Pinion Shims (4HA-115)	16—16	1	
3856	**Shim,** outer, adjusting Pinion (.003" thick) (2HA-039)	16—17	As req'd	**USE SHIM OF DESIRED THICKNESS.**
3867	**Shim,** outer, adjusting Pinion (.005" thick) (2HA-040)	16—17	As req'd	
3858	**Shim,** outer, adjusting Pinion (.010" thick) (2HA-041)	16—17	As req'd	
3859	**Shim,** outer, adjusting Pinion (.030" thick) (2HA-042)	16—17	As req'd	
3843	**Roller Bearing,** at Outer end of Pinion (Timken 02872-02820) (2HA-022)	16—18	1	
3934	**Oil Slinger,** on Pinion (4HA-036)	16—19	1	
3840	**Oil Seal,** on Pinion (2HA-019)	16—20	1	
3841	**Gasket,** for Pinion Oil Seal (2HA-020)	16—21	1	
3954	**Companion Flange Assembly** (5HA-083-1)	16—22	1	
115	**Nut,** securing Companion Flange to Pinion (12LN-NF.9)	16—23	1	
114	**Washer,** under Nut (12W-24)	16—24	1	
C.970/1	**Grease Nipple,** on Axle Tubes (NA.6653)	16—25	2	
26238/23	**Axle Shaft** (4HA-005-48)	16—26	2	
26275	**REAR AXLE ASSEMBLY (RATIO 3.77 : 1) (4HA-001-113)**		1	**L.H. DRIVE CARS ONLY**
9030	**Carrier and Tube Assembly** (4HA-101-62)		1	

All other items as for Rear Axle 26274.

REAR AXLE

Fitted to Chassis No. 137258 and subs. DQ.450
136019 and subs. DR.450/1

Part No.	Description	Plate No.	No. per Unit	Remarks
7380	**DIFFERENTIAL ASSEMBLY (4HA-082-11)**		1	
7888	**Case only,** for Differential (4HA-006-10)	16—27	2 halves	
7683	**Friction Plate** (flat) for Differential Clutch (4HA-111-3)	16—28	4	
8397	**Friction Plate** (Dished) for Differential Clutch (4HA-111-4)	16—29	2	
7684	**Friction Disc,** for Differential Clutch (4HA-112)	16—30	4	
7682	**Ring,** for Side Gears (4HA-109-1)	16—31	2	
7681	**Gear,** Side, for Differential (4HA-007-1)	16—32	2	
7685	**Gear,** Differential Pinion Mate (4HA-008)	16—33	4	
7686	**Shaft,** for Pinion Mate Gears (4HA-012-1)	16—34	2 halves	
7687	**Spacer,** on Shaft (4HA-033-1)	16—35	2	
7688	**Roll Pin,** for Spacer (RP.4-22)	16—36	1	
7680	**Bolt,** securing Differential Case (6B-NC.44)	16—37	8	
26238/23	**REAR AXLE SHAFT (4HA-005-48)**	16—26	2	
C.7356	**Key,** locating Hubs to Axle Shafts (2HA-029)	16—38	2	
3848	**Oil Seal,** in ends of Carrier Tube, for Axle Shafts (2HA-027)	16—39	2	
3846	**Roller Bearing,** for Hubs (Timken 25877-25821) (2HA-025)	16—40	2	
131	**Slotted Nut,** on Axle Shafts (16SN-NF.10)	16—41	2	
133	**Washer,** under Nuts (16W-31)	16—42	2	
L.104/14U	**Split Pin,** locking Nuts (8.SP-14)	16—43	2	
308131	**REAR CALIPER SUPPORT BRACKET**		2	
3867	**Shim,** .003" thick, adjusting Hub Bearings (2HA-050)	16—44	As req'd	**USE SHIMS OF DESIRED THICKNESS.**
3868	**Shim,** .005" thick, adjusting Hub Bearings (2HA-051)	16—44	As req'd	
3869	**Shim,** .010" thick, adjusting Hub Bearings (2HA-052)	16—44	As req'd	
3870	**Shim,** .030" thick, adjusting Hub Bearings (2HA-053)	16—44	As req'd	
7955	**Oil Seal,** for Rear Hubs (4HA-057/5)	16—45	2	
C.1483	**Gasket,** behind Oil Seals (2HA-031)	16—46	2	
134502/01	**Bolt,** securing Brackets to Axle (6B-NF.19)	16—47	10	
26223/19	**Nut,** on Bolts (6LN-NF.6B)	16—48	10	
134502/03	**Lockwasher,** under Nuts (6W-12)		10	
308365	**R.H. REAR HUB ASSEMBLY**	16—49	1	
430261	**Stud,** in R.H. Hub, for Road Wheel		5	
422753	**Nut,** securing Road Wheel to R.H. Rear Hub		5	
308366	**L.H. REAR HUB ASSEMBLY**		1	
431019	**Stud,** in L.H. Hub, for Road Wheel		5	
431021	**Nut,** securing Road Wheel to L.H. Rear Hub		5	
C.22237	**DISTANCE PIECE, BETWEEN REAR HUB AND ROAD WHEEL**		2	Fitted to Chassis No. 137350 and subs. DQ.450; 136290 and subs. DR.450/1. **NOTE :—May be used on cars prior to above Chassis numbers if it is necessary to prevent tyre fouling Damper Bracket.**

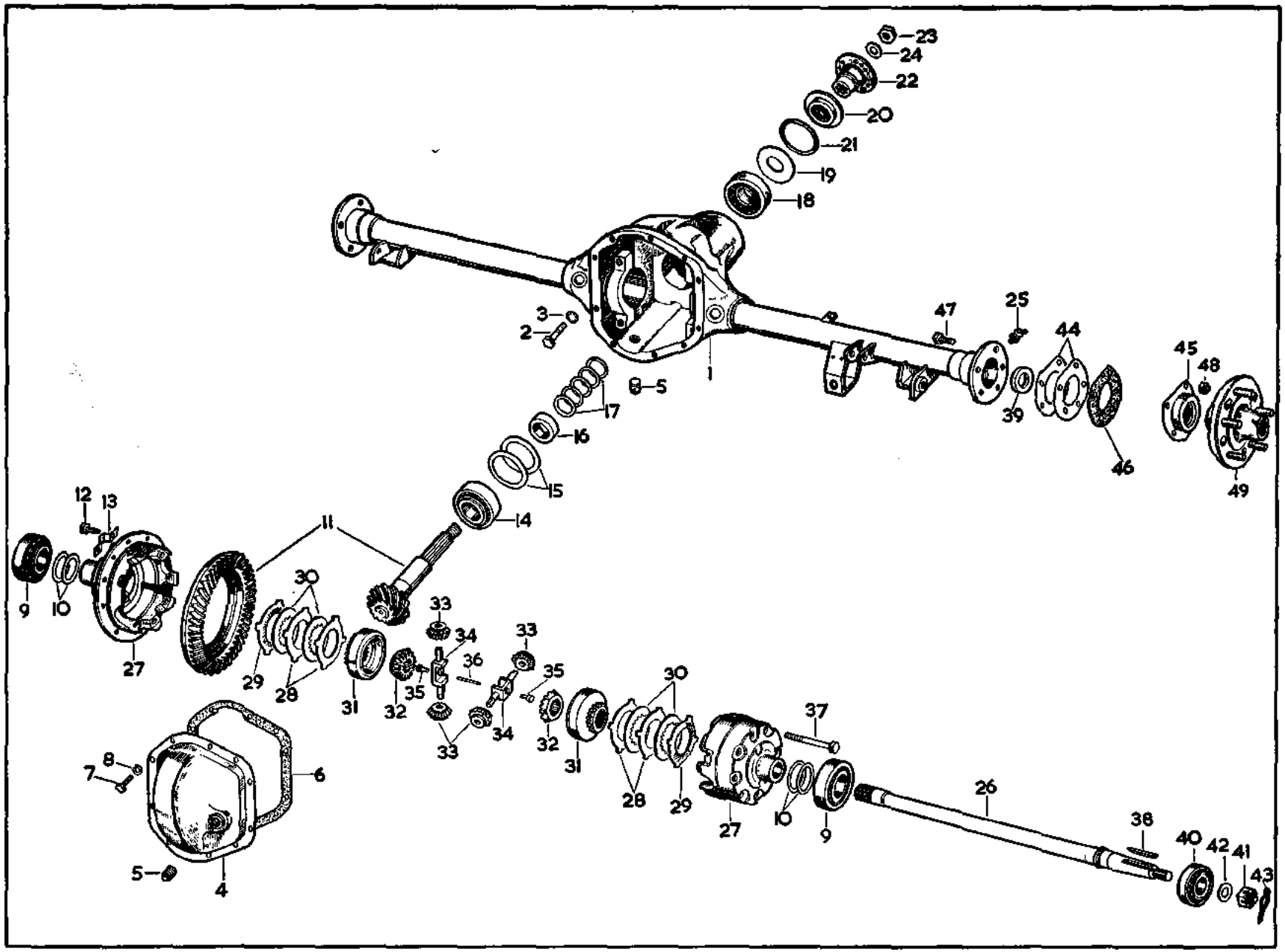
1
2
3
4
5
6
7
8
9
10
11
12
13
14
15
16
17
18
19
20
21
22
23
24
25
26
27
28
29
30
31
32
33
34
35
36
37
38
39
40
41
42
43
44
45
46
47
48
49

PLATE 16

Part No.	Description	Plate No.	No. per Unit	Remarks
425014	**R.H. BOTTOM TRANSVERSE LINK ASSEMBLY**	17—1	1	
4220962	**Bearing,** (Metalastic) in Link Eye	17—2	1	
425015	**L.H. BOTTOM TRANSVERSE LINK ASSEMBLY**		1	
422962	**Bearing** (Metalastik) in Link Eye		1	
11108/28	**Bolt,** securing Bottom Transverse Link to Frame Attachment Bracket		2	
422514/09	**Nut,** Nyloc, on Bolts		2	
302499	**SPRING, FRONT SUSPENSION**	17—3	2	Fitted from Chassis No. 136711 to 137222 DQ.450; 136891 to 136904 DQ.451; 136011 to 136286 DR.450/1
420933	**Seating,** (Rubber) for Springs	17—4	4	
C.20448	**SPRING, FRONT SUSPENSION**		2	Fitted to Chassis No. 137223 and subs. DQ.450; 136905 and subs. DQ.451; 136287 and subs. DR.450/1
C.20449	**Sandwich Ring** (Rubber) for Springs		2	
420933	**Seating** (Rubber) for Springs		6	
133109	**R.H. PEDESTAL**	17—5	1	
133108	**L.H. PEDESTAL**		1	
422963	**Bearing** (Metalastik), Pedestal to Top Link	17—6	2	
400146	**Spherical Bearing,** Pedestal to Bottom Link	17—7	2	
400116	**Bush,** retaining Spherical Bearing	17—8	4	
400119/1	**Shim,** (.002" thick) between Bush and Retaining Plate	17—9	As req'd	
400119/2	**Shim,** (.003" thick) between Bush and Retaining Plate	17—9	As req'd	
400119/3	**Shim,** (.005" thick) between Bush and Retaining Plate	17—9	As req'd	
400111	**Retaining Plate,** for Bearing	17—10	4	
400610	**Cover,** (Rubber) for Bearing	17—11	4	
400203	**Tube,** for Bearing End	17—12	4	
400611	**Retainer,** for Bearing Cover	17—13	4	
11104/14	**Bolt,** securing Bearing Assembly to Pedestal		8	
13104	**Nut,** on Bolts		8	
430241/04	**Washer,** Spring, on Bolts		8	
422750	**Bolt,** securing Bottom Link to Pedestal		2	
13310	**Nut,** Slotted, on Bolts		2	
422501/27	**Split Pin,** retaining Nuts		2	
422521/29	**Grease Nipple,** for Pedestal	17—14	2	

FRONT SUSPENSION

Part No.	Description	Plate No.	No. per Unit	Remarks
432005	**R.H. PEDESTAL ADJUSTER**	17—15	1	
432166	**L.H. PEDESTAL ADJUSTER**		1	
430102	**Dowel**, for Pedestal		2	
12106/14	**Screw**, Set, for Pedestal Adjuster		2	
431122	**Screw**, Set, for Pedestal Adjuster		2	
13106	**Locknut**, on Setscrews		4	
430107	**Washer**, Plain, on Setscrews		8	
308377	**TOP TRANSVERSE LINK ASSEMBLY**		2	
302597	**Link Member**	17—16	2	
422963	**Bush** (Metalastik) in Link Eye	17—17	2	
400080	**Oil Retainer** (Rubber)	17—18	2	
431918	**Fork End Assembly**	17—19	2	
422521/30	**Grease Nipple**, in Fork End	17—20	2	
11108/26	**Bolt**, securing Transverse Link to Pedestal and Frame		4	
422514/09	**Nut**, Nyloc, on Bolts		4	
136349	**R.H. TORQUE LINK ASSEMBLY**	17—21	1	
136348	**L.H. TORQUE LINK ASSEMBLY**		1	
425027	**Bush** (Metalastik) in Link	17—22	2	
11106/11	**Bolt**, securing Torque Link to Pedestal		4	
11106/18	**Bolt**, securing Torque Link to Pedestal		4	
422514/07	**Nut**, Nyloc, on Bolts		8	
11110/46	**Bolt**, securing Link Eye to Frame		2	
422514/11	**Nut**, Nyloc, on Bolts		2	
304789	**SWIVEL AXLE ASSEMBLY**	17—23	2	
425585	**Race**, at top of Swivel Axle, for Needle Bearings		2	
426250	**Bush**, at bottom of Swivel Axle, for Swivel Pin		2	

Part No.	Description	Plate No.	No. per Unit	Remarks
304795	**SWIVEL PIN**	17—24	2	
423171/09	**Needle Roller** at Top (3 mm. × 19.8 mm.)	17—25	48	
425587	**Cap,** Needle Roller Bearings	17—26	2	
425588	**Oil Seal** (Cork), Top	17—27	2	
401798	**Cap,** for Oil Seal, Top	17—28	2	
416335	**Adaptor,** for Top Grease Nipples	17—29	2	
422521/44	**Grease Nipple,** Top	17—30	2	
426255	**Sealing Ring,** Swivel Pins	17—31	2	
420932	**Cotter Pin,** securing Swivel Pins	17—32	2	
13104	**Nut,** on Cotter Pins		2	
422500/01	**Washer,** Plain, on Cotter Pins		2	
424733	**Washer** (Felt), on Swivel Pin, Lower	17—33	2	
424734	**Retainer,** for Felt Washers	17—34	2	
425515	**Thrust Pad,** Swivel Pins	17—35	2	
425543	**Bottom Cover,** Swivel Axles	17—36	2	
425592	**Shim,** for Bottom Covers	17—37	10	
12106/08	**Screw,** Set, securing Bottom Cover to Swivel Axles		4	
425536	**Tab Washer,** on Setscrews		2	
422521/39	**Grease Nipple,** Bottom	17—38	2	
305114	**R.H. STEERING ARM**	17—39	1	
305115	**L.H. STEERING ARM**		1	
432401	**R.H. Hose Bracket,** for Front Brakes	17—40	1	
432400	**L.H. Hose Bracket,** for Front Brakes		1	
308472	**R.H. ADAPTOR PLATE FOR FRONT BRAKE CALIPER**	17—41	1	
308471	**L.H. ADAPTOR PLATE FOR FRONT BRAKE CALIPER**		1	
11106/11	**Bolt,** securing Adaptor Plate and Hose Bracket to Swivel Axles		2	
11106/10	**Bolt,** securing Adaptor Plate to Swivel Axles		2	
11106/16	**Bolt,** securing Steering Arm and Adaptor Plate to Swivel Axles		4	
422514/07	**Nut,** Nyloc, on Bolts		8	
423200/26	**Oil Seal,** for Swivel Axles	17—42	2	
425117	**Distance Piece,** Swivel Axles	17—43	2	

FRONT SUSPENSION

Part No.	Description	Plate No.	No. per Unit	Remarks
308474	**R.H. FRONT HUB ASSEMBLY**	17—44	1	
422753	**Nut,** on Wheel Studs (R.H. Thread)		5	
308473	**L.H. FRONT HUB ASSEMBLY**		1	
431021	**Nut,** on Wheel Studs (L.H. Thread)		5	
423173/16	**Bearing,** Inner, for Hubs (Timken LM.48548/LM.48510)	17—45	2	
423173/05	**Bearing,** Outer, for Hubs (Timken 07100-SA/07210X)	17—46	2	
420955	**Adjusting Nut,** for Front Hub Bearings	17—47	2	
276462	**Peg,** for Adjusting Nuts	17—48	2	
276448	**Tab Washer,** for Adjusting Nuts	17—49	2	
13112	**Nut,** securing Hubs to Swivel Axles	17—50	2	
422813	**Tab Washer,** under Nuts	17—51	2	
302822	**Cap,** for Front Hubs	17—52	2	
430941	**Seal,** Rubber, for Cap Nuts	17—53	2	
134477	**ANTI-ROLL BAR**	17—54	1	Fitted from Chassis No. 136711 to 137265 DQ.450; 136891 to 136906 DQ.451; 136011 to 136219 DR.450/1
136661	**ANTI-ROLL BAR**		1	Fitted to Chassis No. 137266 and subs. DQ.450; 136907 and subs. DQ.451; 136220 and subs. DR.450/1
420979	**Bracket,** supporting Anti-Roll Bar	17—55	2	
420980	**Bracket,** retaining Anti-Roll Bar in Support Brackets	17—56	2	
425472	**Sleeve** (Rubber) on Anti-Roll Bar, in Support Brackets	17—57	2	
12106/07	**Screw,** Set, securing Brackets to Frame		8	
430241/06	**Washer,** Spring, on Setscrews		8	
426144	**Clip,** retaining Sleeves	17—58	2	
11105/16	**Bolt,** securing Clip to Anti-Roll Bar		2	
13105	**Nut,** on Bolts		2	
422500/02	**Washer,** Plain, under Nuts		2	
430241/05	**Washer,** Spring, under Nuts		2	
302823	**SPINDLE, SECURING ANTI-ROLL BAR TO FRONT SUSPENSION**	17—59	2	
422688	**Buffer** (Rubber) at each end of Anti-Roll Bar Spindles	17—60	8	
420977	**Washer,** retaining Buffers on Anti-Roll Bar Spindles	17—61	8	
13306	**Nut,** Slotted, on Spindles		4	
422501/07	**Split Pin,** retaining Nuts		4	
309020	**FRONT SHOCK ABSORBER (NF.4)**	17—62	2	
8299	**Rubber Buffer,** at Top of Shock Absorbers		4	
C.3273	**Rubber Bush,** in Bottom Eye of Shock Absorbers		4	

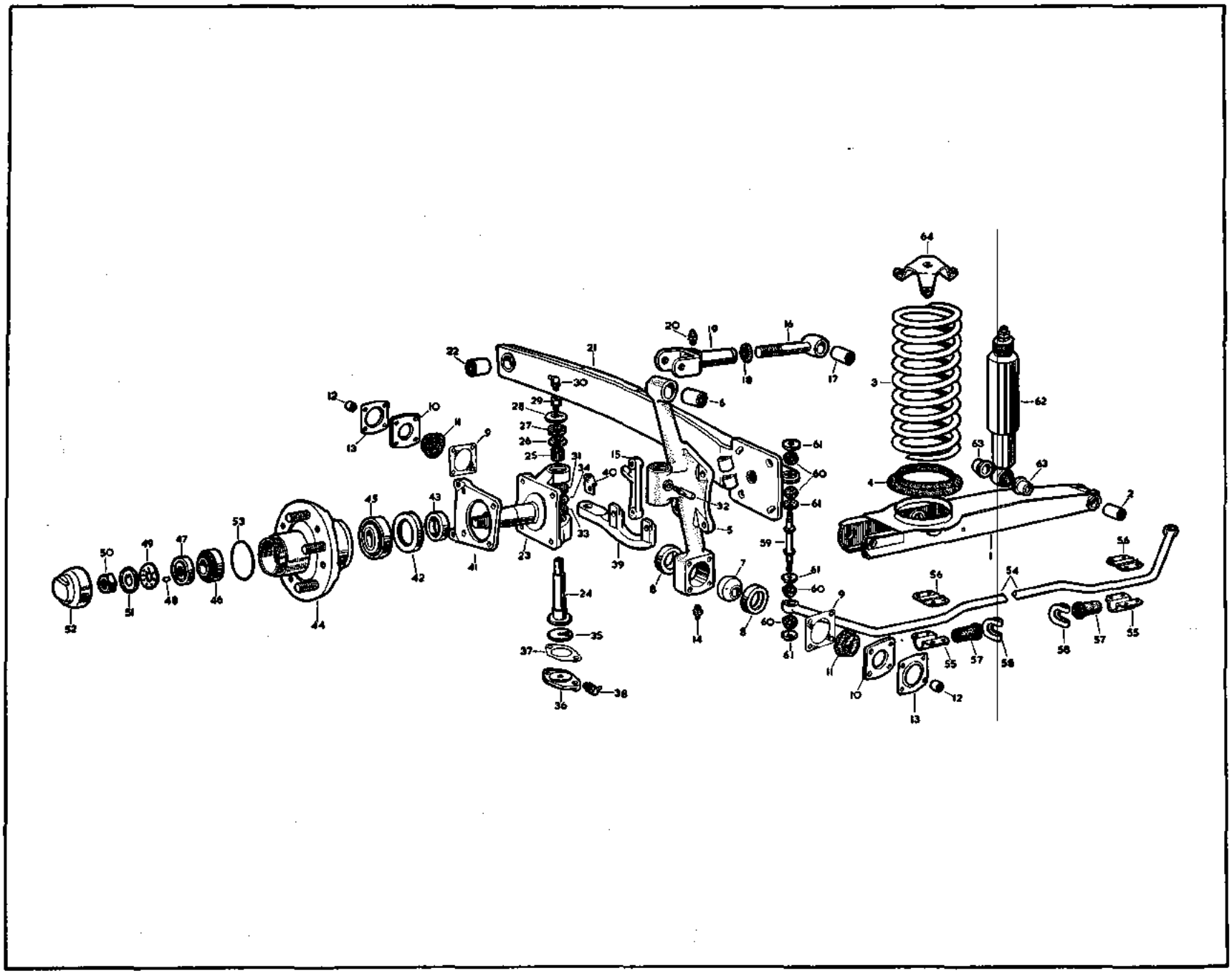
64
20
19
16
22
21
18
17
3
62
30
6
12
10
29
28
27
26
25
14
9
13
61
63
15
31
34
40
60
43
4
32
2
45
43
53
5
33
59
56
50
49
47
23
39
61
54
7
24
42
41
8
60
9
56
52
51
48
46
44
35
14
8
61
11
55
57
58
55
58
57
37
10
12
38
36
13
1

ROAD WHEELS

Part No.	Description	Plate No.	No. per Unit	Remarks
135318	**ROAD WHEEL ASSEMBLY**		5	
432227	**OUTER COVER (DUNLOP ROAD SPEED) (7.00″ × 16″)**		5	
C.12671	**INNER TUBE (DUNLOP 6.70″ × 16″)**		5	
135999	**HUB CAP, FOR ROAD WHEELS**		4	
136042	**RIMBELLISHER, FOR ROAD WHEELS**		5	
	BALANCE WEIGHTS FOR ROAD WHEELS			
C.3985	**Balance Weight** (½ oz.)		As req'd	
C.3986	**Balance Weight** (1 oz.)		As req'd	
C.3987	**Balance Weight** (1½ oz.)		As req'd	
C.3988	**Balance Weight** (2oz.)		As req'd	
C.3989	**Balance Weight** (2½ oz.)		As req'd	
C.3990	**Balance Weight** (3 oz.)		As req'd	

Part No.	Description	Plate No.	No. per Unit	Remarks
136387	**R.H. FRONT CALIPER ASSEMBLY (VBO.1075A)**		1	Fitted from Chassis No. 136711 to 137241 DQ.450 And to All DQ.451 136011 to 136202 DR.450/1
7780	**Front Caliper only** (VB.728)	18—1	1	
7936	**Friction Pad Assembly** (VBO.5201/N)	18—2	2	**NOT SUPPLIED SEPARATELY. SEE KIT**
7788	**Support Plate,** for Friction Pads (VBO.5180)	18—3	2	
7789	**Retaining Plate,** for Friction Pads (VBO.5181)	18—4	1	
UFB.125/8R	**Bolt,** securing Retaining Plates (VBO.6003)	18—5	1	
UFN.125/L	**Nut,** on Bolt (VBO.6053)	18—6	1	
C.724	**Washer,** Shakeproof, under Nut (VBO.6101)	18—7	1	
9338	**Piston and Cylinder Assembly** (VBO.5369)	18—8	2	
7791	**Bolt,** securing Cylinders to Caliper (VBO.5153)	18—9	8	
C.724	**Washer,** Shakeproof (VBO.6101)	18—10	8	
6911	**Bleed Screw and Ball Assembly** (VBO.8378)	18—11	1	
136387/01	**Bridge Pipe Assembly** (VBO.4315)	18—12	1	
136388	**L.H. FRONT CALIPER ASSEMBLY (VB.1075B)**		1	Fitted from Chassis No. 136711 to 137241 DQ.450 And to all DQ.451 136011 to 136202 DR.450/1
136388/01	**Bridge Pipe Assembly** (VBO.4316)		1	
	All other items are as for R.H. Front Caliper Assembly 136387.			
136735	**R.H. FRONT CALIPER ASSEMBLY (VB.1188A)**		1	Fitted to Chassis No. 137242 and subs. DQ.450 136203 and subs. DR.450/1
8887	**Piston and Cylinder Assembly** (VBO.5471)		1	
	All other items are as for R.H. Front Caliper Assembly 136387.			
136736	**L.H. FRONT CALIPER ASSEMBLY (VB.1188B)**		1	Fitted to Chassis No. 137242 and subs. DQ.450 136203 and subs. DR.450/1
8887	**Piston and Cylinder Assembly** (VBO.5471)		1	
136388/01	**Bridge Pipe Assembly** (VBO.4316)		1	
	All other items are as for R.H. Front Caliper Assembly 136387.			
C.13196	**Shim,** (.005" thick) for adjustment of Front Callpers (VBO.5116)	18—13	As req'd	
C.13197	**Shim,** (.020" thick) for adjustment of Front Calipers (VBO.5118)	18—13	As req'd	
430895	**Bolt,** securing Calipers to Adaptor Plates		4	
431241	**Lockplate,** on Bolts		2	
6915	**REPAIR KIT FOR FRONT WHEEL CYLINDERS (JA.1)**		1	
	(Comprising Piston Seal, Piston Washer, and Dust Seal).			

FRONT BRAKES

Part No.	Description	Plate No.	No. per Unit	Remarks
9252	**FRICTION PAD KIT (VBO.8329/N)** (COMPRISING FOUR FRICTION PADS)		1	
7840	**PISTON RETRACTION TOOL**		1	FOR USE WHEN RENEWING FRICTION PADS
308472	**ADAPTOR PLATE FOR R.H. FRONT CALIPER**	18—14	1	
308471	**ADAPTOR PLATE FOR L.H. FRONT CALIPER**		1	
136359	**DISC, FOR FRONT CALIPERS (VBM.3870)**	18—15	2	
430897	Bolt, securing Discs to Front Hubs		10	
430241/07	Washer, Spring, on Bolts		10	

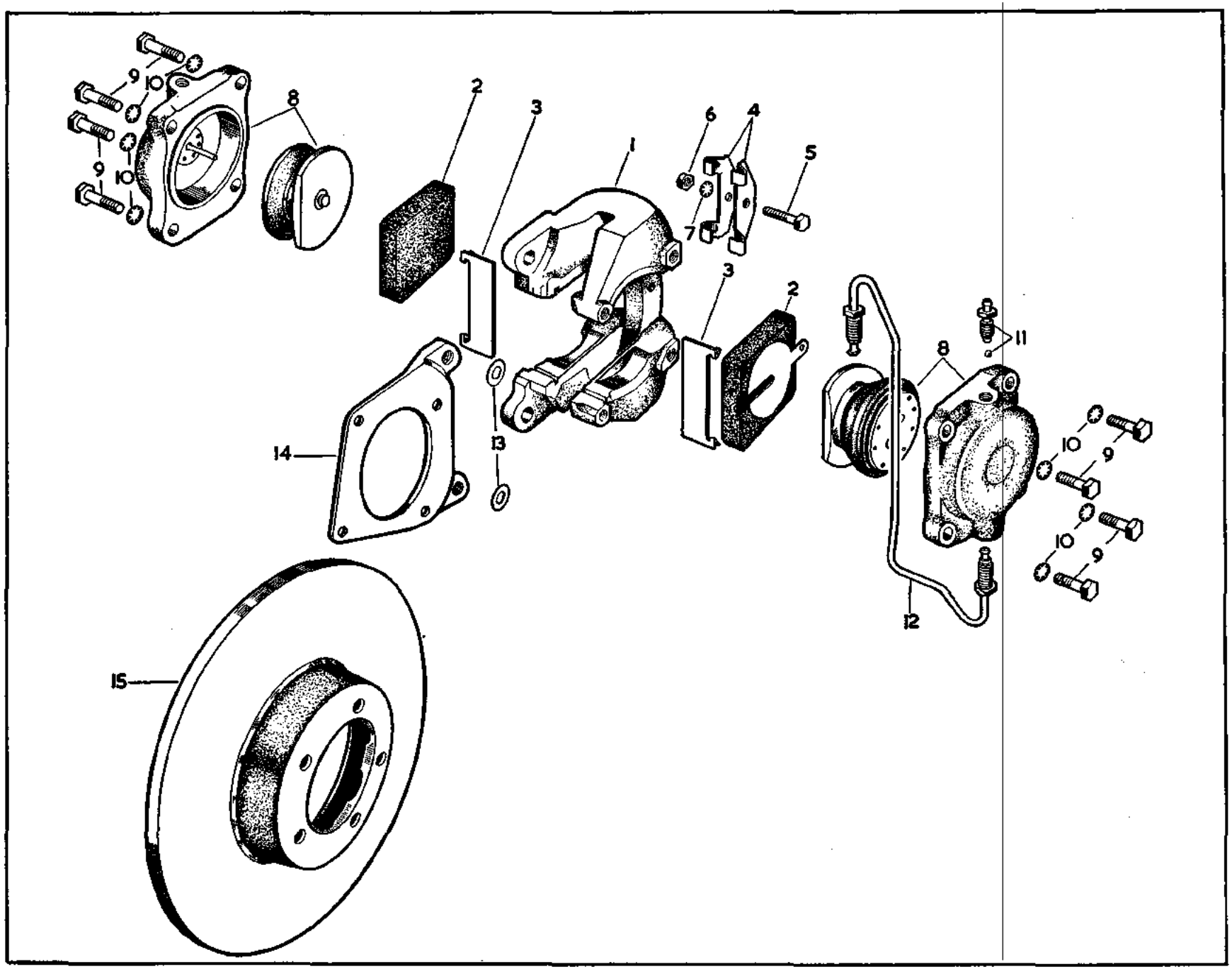

PLATE 18

REAR BRAKES

Part No.	Description	Plate No.	No. per Unit	Remarks
136338	**R.H. REAR CALIPER ASSEMBLY (VB.1099A)**		1	Fitted from Chassis No. 136711 to 137241 DQ.450 And to all DQ.451 136011 to 136202 DR.450/1
136338/01	**R.H. Rear Caliper Only** (VBM.1078)	19—1	1	
7937	**Friction Pad** (VBO.5138N)	19—2	2	
7718	**Support Plate,** for Friction Pads (VBO.5133)	19—3	2	
136176/13	**Retaining Plate,** for Friction Pads (VBO.5125)	19—4	1	
UFB.125/8R	**Bolt,** securing Retaining Plate (VBO.6003)	19—5	1	
UFN.125/L	**Nut,** on Bolt (VBO.6053)	19—6	1	
C.724	**Washer,** Shakeproof, under Nut (VBO.6101)	19—7	1	
9339	**Piston and Cylinder Assembly** (VBO.5374)	19—8	1	
7720	**Bolt,** securing Cylinders to Caliper (VBO.5100)	19—9	8	
C.724	**Washer,** Shakeproof, on Bolts (VBO.6101)	19—10	8	
6911	**Bleed Screw and Ball Assembly** (VBO.8378)	19—11	1	
7827	**Bridge Pipe Assembly,** R.H. (VBO.3589)	19—12	1	
136339	**L.H. REAR CALIPER ASSEMBLY (VB.1099B)**		1	Fitted from Chassis No. 136711 to 137241 DQ.450 And to all DQ.451 136011 to 136202 DR.450/1
136339/01	**L.H. Rear Caliper only** (VBO.1079)		1	
7826	**Bridge Pipe Assembly,** L.H. (VBO.3588)		1	
	All other items are as for R.H. Rear Caliper Assembly 136338.			
136737	**R.H. REAR CALIPER ASSEMBLY (VB.1181A)**		1	Fitted to Chassis No. 137242 and subs. DQ.450 136203 and subs. DR.450/1
8883	**Piston and Cylinder Assembly** (VBO.5406)		1	
	All other items are as for R.H. Rear Caliper Assembly 136338.			
136738	**L.H. REAR CALIPER ASSEMBLY (VB.1181B)**		1	Fitted to Chassis No. 137242 and subs. DQ.450 136203 and subs. DR.450/1
136339/01	**L.H. Rear Caliper only** (VBO.1079)		1	
8883	**Piston and Cylinder Assembly** (VBO.5406)		1	
7826	**Bridge Pipe Assembly,** L.H. (VBO.3588)		1	
	All other items are as for R.H. Rear Caliper Assembly 136338.			
C.13198	**Shim,** (.005" thick) for adjustment of Rear Calipers (VBO.5115)		As req'd	
C.13199	**Shim,** (.020" thick) for adjustment of Rear Calipers (VBO.5117)		As req'd	
430896	**Bolt,** securing Calipers to Adaptor Plates		4	
431147	**Lockplate,** on Bolts		2	

Part No.	Description	Plate No.	No. per Unit	Remarks
136178/08	**REPAIR KIT FOR REAR WHEEL CYLINDERS** (COMPRISING PISTON SEAL AND DUST SEAL)		1	
9251	**FRICTION PAD KIT (VBO.8328/N)** (COMPRISING FOUR FRICTION PADS)		1	
7840	**PISTON RETRACTION TOOL (AO.103741)**		1	FOR USE WHEN RENEWING FRICTION PADS
136341	**R.H. HANDBRAKE MECHANISM ASSEMBLY (VBM.3721A)**	19—13	1	
136213/04	**Pad Carrier Assembly,** R.H. Inner (VBM.3031/A)	19—14	1	
136213/05	**Pad Carrier Assembly,** R.H. Outer (VBM.4143/A)	19—15	1	
136019/01	**Operating Lever Assembly** (VBO.3450)	19—16	1	
6927	**Bolt,** securing Pad Carriers to Operating Lever (VBO.2338)	19—17	1	
C.3968/2	**Nut,** Self-Locking, on Bolt	19—18	1	
6923	**Pivot Seat** (VBO.2350)	19—19	1	
8015	**Clevis Pin,** securing Operating Lever to Pivot Seat (VBO.4182)	19—20	1	
L.102/4U	**Split Pin,** retaining Clevis Pin	19—21	1	
FW.104/T	**Washer,** Plain, behind Split Pin	19—22	1	
136342	**L.H. HANDBRAKE MECHANISM ASSEMBLY (VBM.3721B)**		1	
136214/01	**Pad Carrier Assembly,** L.H. Inner (VBM.3031/B)		1	
136214/02	**Pad Carrier Assembly,** L.H. Outer (VBM.4143/B)		1	
	All other items are as for R.H. Handbrake Mechanism Assembly 136341			
8016	**Bolt,** securing Handbrake Mechanism to Rear Calipers (VBO.4190)	19—23	4	
136341/01	**Retraction Plate,** on Bolts (VBO.3764/2)	19—24	2	
136341/03	**Tab Washer,** Locking Bolts (VBO.4225)	19—25	2	
136213/12	**REPAIR KIT FOR HANDBRAKE MECHANISM** (COMPRISING FRICTION PADS AND FIXINGS)		1	

REAR BRAKES

Part No.	Description	Plate No.	No. per Unit	Remarks
136208	**DISC, FOR REAR CALIPERS (VBM.3650)**	19—26	2	
431546	Bolt, securing Discs to Rear Hubs		10	
13106	Nut, on Bolts		10	
430241/06	Washer, Spring, under Nuts		10	
308131	**REAR CALIPER ADAPTOR PLATE**	19—27	2	

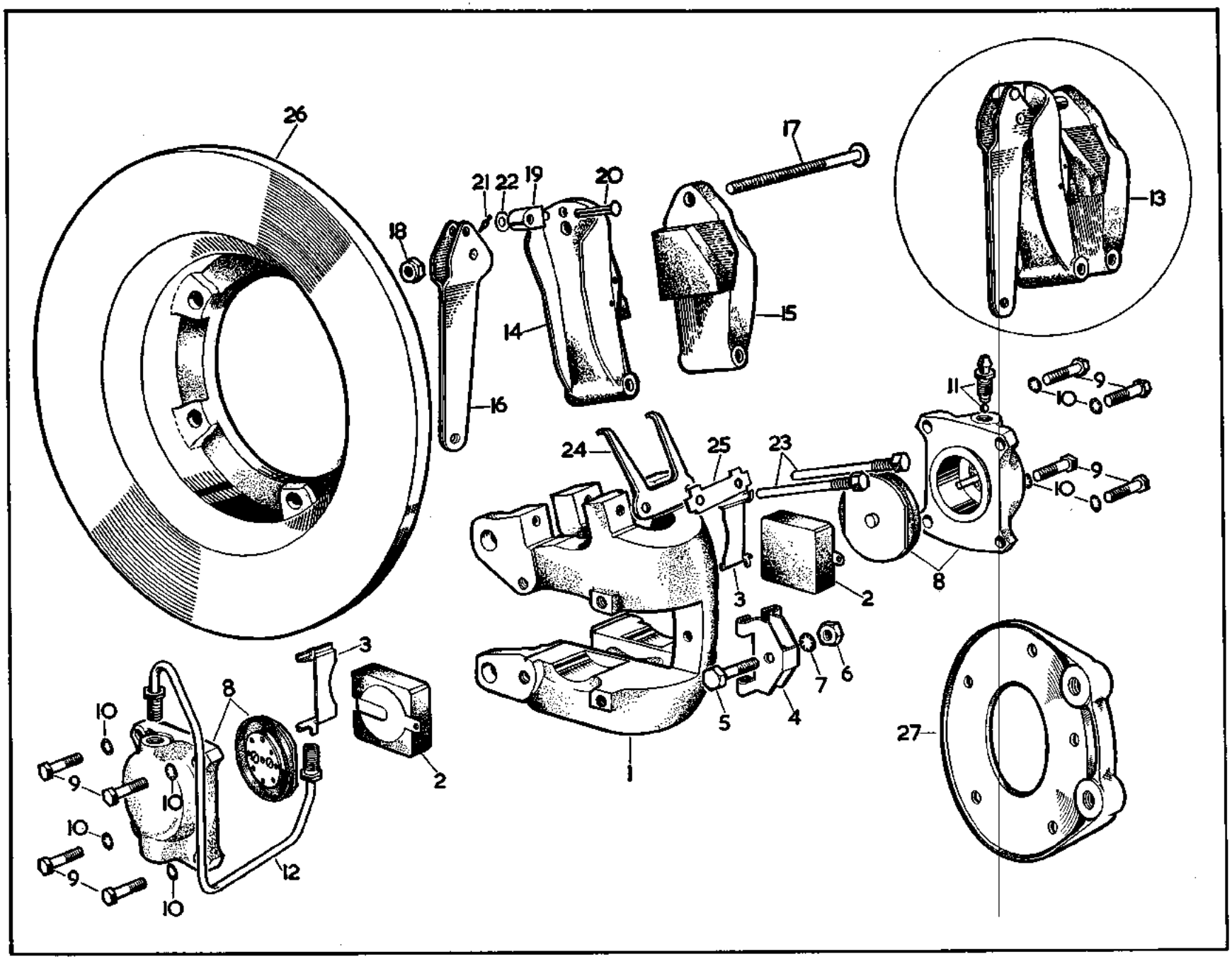
26
17
21
22
19
20
18
13
14
15
16
11
9
10
24
25
23
9
10
3
2
8
7
6
5
4
1
27
3
8
10
9
10
2
10
9
12
10

PLATE 19

BRAKE CONTROLS AND HYDRAULICS

Part No.	Description	Plate No.	No. per Unit	Remarks
C.13165	**BRAKE FLUID SUPPLY TANK ASSEMBLY (VBM.521)**	20—1	1	
431017	**Clip,** for Supply Tank	20—2	1	
422545/16	**Screw,** securing Clip to Supply Tank		1	
420241/03	**Washer,** Spring, on Screw		1	
422543/2	**Nut,** on Screw		1	
307704	**PIPE ASSEMBLY FROM SUPPLY TANK TO BRAKE MASTER CYLINDER (VBO.3438)**	20—3	1	**R.H. DRIVE CARS ONLY**
307705	**PIPE ASSEMBLY FROM SUPPLY TANK TO BRAKE MASTER CYLINDER (VBO.3563)**		1	**L.H. DRIVE CARS ONLY**
308586	**BRAKE MASTER CYLINDER ASSEMBLY (VBM.4023)**	20—4	1	
7474	**Body only** (VBM.3236)	20—5	1	
8296	**Seal,** on Valve (VBO.4842)	20—6	1	
7676	**Valve** (VBO.3539)	20—7	1	
6943	**Spring,** on Valve (VBO.1410)	20—8	1	
7675	**Spring Support,** between Spring and Valve (VBO.4141)	20—9	1	
8292	**Main Spring** (VBO.4767)	20—10	1	
6942	**Spring Support,** between Spring and Piston (VBO.2042)	20—11	1	
8293	**Cup Seal,** on Piston (VBO.4625)	20—12	1	
8291	**Piston** (VBO.4768)	20—13	1	
8294	**Static Seal,** on Piston (VBO.4623)	20—14	1	
307711/10	**Push Rod** (VBO.3103)	20—15	1	
6947	**Washer,** on Push Rod (VBO.1867)	20—16	1	
6948	**Circlip,** retaining Push Rod in Cylinder Body (VBO.2048)	20—17	1	
6945	**Dust Excluder,** over End of Cylinder Body (VBO.1869)	20—18	1	
UFN.131/L	**Nut,** on Push Rod	20—19	1	
	NOTE :—Individual Parts of Master Cylinder are not supplied. Use Reconditioning Kit to service Master Cylinder.			
8250	**MASTER CYLINDER RECONDITIONING KIT (VBO.4843)**		1	
431027	**JAW, SECURING MASTER CYLINDER TO BRAKE PEDAL**	20—20	1	
13205	**Locknut,** on Push Rod		1	
422531/25	**Clevis Pin,** securing Jaw to Pedal	20—21	1	
422501/13	**Split Pin,** retaining Clevis Pin		1	
422500/02	**Washer,** Plain, under Split Pin		1	

BRAKE CONTROLS AND HYDRAULICS

Part No.	Description	Plate No.	No. per Unit	Remarks
433063	**BRAKE PEDAL ASSEMBLY**	20—22	1	**R.H. DRIVE CARS ONLY**
1012/11	**Bush**, for Pedal		2	
433064	**BRAKE PEDAL ASSEMBLY**		1	**L.H. DRIVE CARS ONLY**
1012/11	**Bush**, for Pedal		2	
427000	**Rubber Cover**, for Brake Pedal	20—23	1	
432148	**Fulcrum Pin**, for Brake Pedal	20—24	1	
422500/07	**Washer**, Plain, on Fulcrum Pin		2	
419514	**Spring**, for Brake Pedal Return	20—25	1	
422501/23	**Split Pin**, retaining Fulcrum Pin		2	
136395	**BRACKET, MOUNTING BRAKE PEDAL AND MASTER CYLINDER**	20—26	1	
12104/11	**Screw**, Set, for adjusting Brake Pedal		1	
13204	**Locknut**, securing adjusting Setscrew		1	
433054	**Distance Piece**, between Master Cylinder and Front of Dash	20—27	1	
433055	**Distance Piece**, at rear of Dash	20—28	1	
11105/30	**Bolt**, securing Master Cylinder and Distance Pieces to Dash		2	
422514/06	**Nut**, Nyloc, on Bolts		2	
433052	**Stop**, for Brake Pedal		1	
12104/05	**Screw**, Set, securing Mounting Bracket and Stop to Dash		6	
13104	**Nut**, on Setscrews		6	
422500/01	**Washer**, Plain, under Nuts		6	
430241/04	**Washer**, Spring, under Nuts		6	
C.12937	**VACUUM SERVO UNIT (4257-551)**	20—29	1	
430969	**AIR CLEANER FOR BRAKE VACUUM SERVO (94383/4)**	20—30	1	
432259	**Pipe**, on Air Cleaner	20—31	1	
432261	**Clip**, securing Air Cleaner to Dash	20—32	1	
426933/35	**Screw**, securing Clips to Air Cleaner and Dash		2	
422514/03	**Nut**, Nyloc, on Screw, at Air Cleaner fixing		1	
430241/03	**Washer**, Spring, on Screw, at Dash fixing		1	
432947	**PIPE, BETWEEN AIR CLEANER AND SERVO**	20—33	1	
308687	**Hose**, connecting Pipe to Air Cleaner Pipe	20—34	1	
422255	**Elbow Hose**, connecting Pipe to Servo	20—35	1	
302454/5	**Clip**, securing Hose and Elbow	20—36	4	

BRAKE CONTROLS AND HYDRAULICS

Part No.	Description	Plate No.	No. per Unit	Remarks
432676	**NON-RETURN VALVE, AT REAR OF INLET MANIFOLD (106211/5)**	20—37	1	
422506/15	**Gasket,** (Copper and Asbestos) for Non-Return Valve	20—38	1	
432700	**Hose,** from Valve to Servo Elbow	20—39	1	
302454/4	**Clip,** securing Hose	20—40	2	
432694	**ELBOW ASSEMBLY FOR CONNECTION OF SERVO HOSES**	20—41	1	
432698	**Bracket Assembly,** mounting Elbow	20—42	1	
12104/04	**Screw,** Set, securing Bracket to Bulkhead and Elbow to Bracket		2	
12104/07	**Screw,** Set, securing Bracket to Floor		1	
430241/04	**Washer,** Spring, on Setscrews		3	
136551	**PIPE ASSEMBLY FROM ELBOW TO SERVO**	20—43	1	
432701	**Hose,** between Elbow and Pipe	20—44	1	
302454/3	**Clip,** securing Hose	20—45	2	
428753	**Clip,** retaining Pipe to Bulkhead	20—46	1	
423187/24	**Screw,** securing Clip		1	
432201	**BANJO, CONNECTING PIPE TO SERVO**	20—47	1	
431013	**Bolt,** securing Banjo	20—48	1	
431014	**Copper Washer,** on Banjo Bolt	20—49	2	
308590	**HYDRAULIC PIPE FROM MASTER CYLINDER TO SERVO (VBO.7339)**	20—50	1	**R.H. DRIVE CARS ONLY**

BRAKE CONTROLS AND HYDRAULICS

Part No.	Description	Plate No.	No. per Unit	Remarks
308591	**HYDRAULIC PIPE FROM MASTER CYLINDER TO CONNECTOR (VBO.8099)**		1	
430981	**CONNECTOR FOR HYDRAULIC PIPES (VBO.1766)**		1	**L.H. DRIVE CARS ONLY**
309209	**HYDRAULIC PIPE FROM CONNECTOR TO SERVO (VBO.8098)**		1	
425456	**Clip,** securing Pipe to Bulkhead	20—51	See Remarks	**R.H. Drive 1 off. L.H. Drive 2 off.**
426086/34	**Bolt,** securing Clip		1	**R.H. DRIVE CARS ONLY**
430241/03	**Washer,** Spring, on Bolt		1	
423187/24	**Screw,** Set, securing Clips		2	**L.H. DRIVE CARS ONLY**
432609	**BANJO, ON SERVO (FFB.80649)**	20—52	1	
432610	**Bolt,** securing Banjo to Servo (FFC.30421)	20—53	1	
432611	**Copper Washer,** on Bolt	20—54	1	
432612	**Copper Washer,** on Bolt	20—55	1	
431723	**STOP LIGHT SWITCH, IN BANJO BOLT**	20—56	1	
431438	**Gasket,** on Switch	20—57	1	
136391	**HYDRAULIC PIPE FROM SERVO BANJO TO INTERMEDIATE 3-WAY UNION (VBO.7334)**		1	Fitted from Chassis No. 136711 to 137241 DQ.450 And to all DQ.451
136583	**HYDRAULIC PIPE FROM SERVO BANJO TO INTERMEDIATE 3-WAY UNION (VBO.7848)**	20—58	1	Fitted to Chassis No. 137242 and subs. DQ.450. And to all DR.450/1
423179/3	**Grommet,** in Bulkhead (859060)	20—59	1	

BRAKE CONTROLS AND HYDRAULICS

Part No.	Description	Plate No.	No. per Unit	Remarks
432608	**INTERMEDIATE 3-WAY UNION (VBO.4015)**		1	
11104/10	**Bolt**, securing 3-way Union to Frame		1	
13104	**Nut**, on Bolt		1	
430241/04	**Washer**, Spring, under Nut		1	
136390	**HYDRAULIC PIPE FROM FRONT 3-WAY UNION TO INTERMEDIATE 3-WAY UNION (VBO.7361)**		1	Fitted from Chassis No. 136711 to 137241 DQ.450 And to all DQ.451
136582	**HYDRAULIC PIPE FROM INTERMEDIATE 3-WAY UNION TO FRONT 3-WAY UNION (VBO.7850)**	20—61	1	Fitted to Chassis No. 137242 and subs. DQ.450. And to all DR.450/1
425456	**Clip**, securing Pipe	20—62	1	
422544/9	**Bolt**, securing Clip		1	
430241/03	**Washer**, Spring, on Bolt		1	
425167	**FRONT 3-WAY UNION (VBO.1227)**	20—63	1	
12105/06	**Bolt**, securing 3-Way Union to Bracket		1	
430241/05	**Washer**, Spring, on Bolt		1	
13105	**Nut**, on Bolt		1	
308589	**HYDRAULIC PIPE FROM FRONT 3-WAY UNION TO R.H. FRONT BRAKE HOSE (VBO.7336)**	20—64	1	
136389	**HYDRAULIC PIPE FROM FRONT 3-WAY UNION TO L.H. FRONT BRAKE HOSE (VBO.7360)**	20—65	1	
276330/2	**Clip**, Double, securing Pipe from Front 3-Way Union to L.H. Front Hose, and Pipe from Front 3-Way Union to Intermediate 3-Way Union		1	
425456	**Clip**, on Front Cross Member	20—66	2	
276300/3	**Clip**, on front of Front Cross Member	20—67	4	
422544/9	**Bolt**, securing Clip		3	
430241/03	**Washer**, Spring, on Bolts		3	
307675	**FRONT BRAKE HOSE (WDO.22608/13½")**	20—68	2	
13206	**Bulkhead Nut**, securing Hose		4	
430241/06	**Washer**, Spring, under Nuts		4	

BRAKE CONTROLS AND HYDRAULICS

Part No.	Description	Plate No.	No. per Unit	Remarks
308588	**HYDRAULIC PIPE FROM FRONT BRAKE HOSE TO R.H. FRONT CALIPER (VBO.7335)**	20—69	1	
308587	**HYDRAULIC PIPE FROM FRONT BRAKE HOSE TO L.H. FRONT CALIPER (VBO.7337)**	20—70	1	
308899	**HYDRAULIC PIPE FROM INTERMEDIATE 3-WAY UNION TO CONNECTOR (VBO.7338)**		1	Fitted from Chassis No. 136711 to 137241 DQ.450 And to all DQ.451
309028	**HYDRAULIC PIPE FROM INTERMEDIATE 3-WAY UNION TO CONNECTOR (VBO.7849)**	20—71	1	Fitted to Chassis No. 137242 and subs. DQ.450 And to all DR.450/1.
425456	**Clip**, securing Pipe	20—72	3	
422544/9	**Bolt**, securing Clips		3	
422543/2	**Nut**, on Bolts		3	
430241/03	**Washer**, Spring, under Nuts		3	
430981	**CONNECTOR BETWEEN PIPE FROM 3-WAY AND REAR PIPE (VBO.1766)**	20—73	1	
136003	**HYDRAULIC PIPE (REAR) FROM CONNECTOR TO REAR BRAKE HOSE (VBO.3444)**	20—74	1	**DQ.450/1 ONLY**
136586	**HYDRAULIC PIPE (REAR) FROM CONNECTOR TO REAR BRAKE HOSE (VBO.7853)**		1	**DR.450/1 ONLY**
425456	**Clip**, securing Pipe	20—75	3	
422544/9	**Bolt**, securing Clips		3	
422543/2	**Nut**, on Bolts		3	
430241/03	**Washer**, Spring, under Nuts		3	

BRAKE CONTROLS AND HYDRAULICS

Part No.	Description	Plate No.	No per Unit	Remarks
307678	**REAR BRAKE HOSE ASSEMBLY (WDO.22681/13")**	20—76	1	
13206	**Bulkhead Nut,** securing Hose		1	
430241/06	**Washer,** Spring, under Nut		1	
425147	**Gasket,** between Hose and Tee-Piece		1	
425167	**TEE-PIECE ON REAR AXLE (VBO.1227)**	20—77	1	
12105/06	**Screw,** Set, securing Tee Piece		1	
13105	**Nut,** on Setscrew		1	
430241/05	**Washer,** Spring, under Nut		1	
307679	**HYDRAULIC PIPE FROM TEE-PIECE TO R.H. REAR BRAKE CALIPER (VBO.3446)**	20—78	1	
136004	**HYDRAULIC PIPE FROM TEE-PIECE TO L.H. REAR BRAKE CALIPER (VBO.3445)**	20—79	1	
302454/15	**Clip,** securing Pipes to Axle	20—80	3	
432108	**Clip,** securing Pipe to Axle	20—81	1	

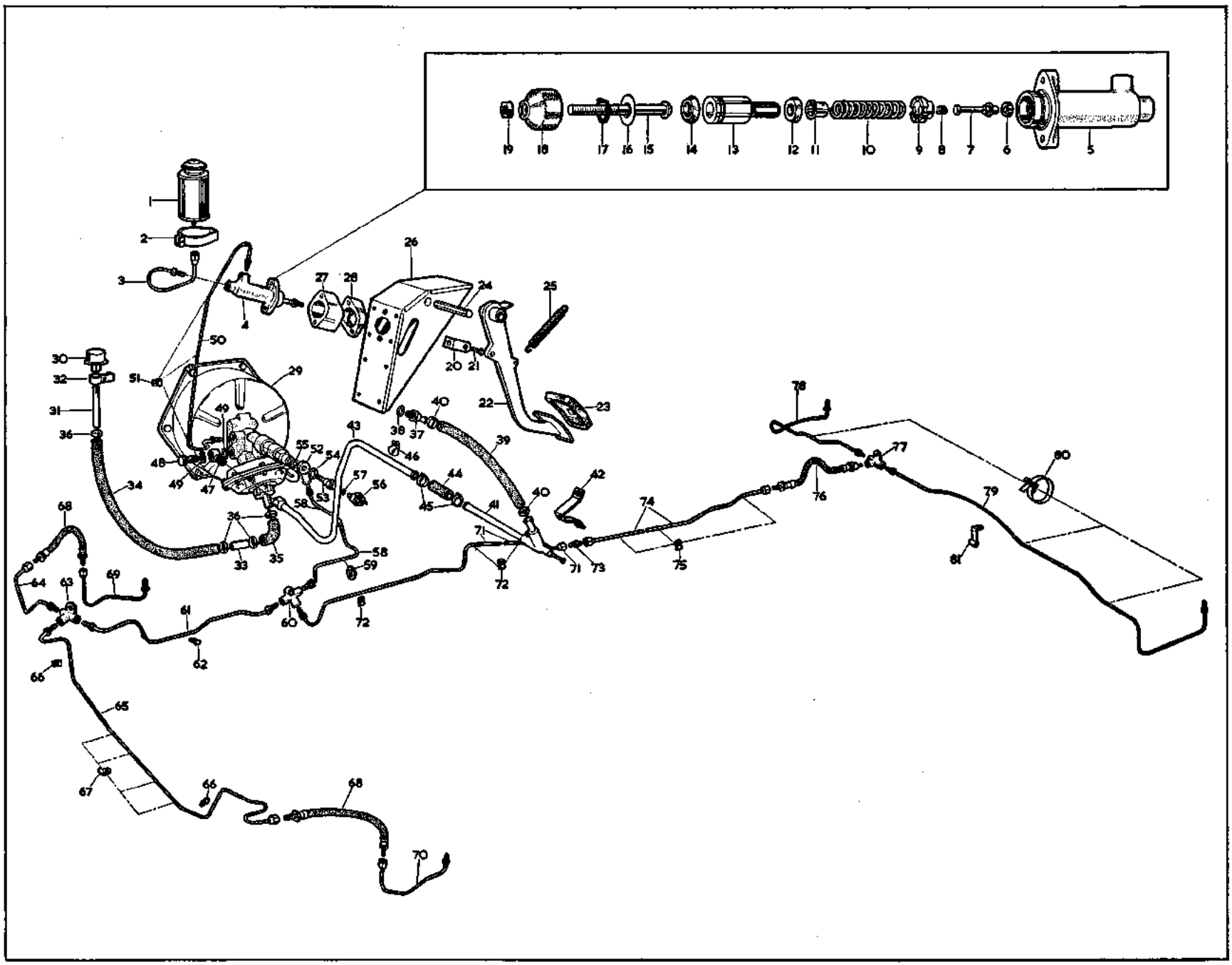
1
2
3
4
5
6
7
8
9
10
11
12
13
14
15
16
17
18
19
20
21
22
23
24
25
26
27
28
29
30
31
32
33
34
35
36
37
38
39
40
41
42
43
44
45
46
47
48
49
50
51
52
53
54
55
56
57
58
59
60
61
62
63
64
65
66
67
68
69
70
71
72
73
74
75
76
77
78
79
80
81

PLATE 20

6⅞" BRAKE VACUUM SERVO

Part No.	Description	Plate No.	No. per Unit	Remarks
C.12937	**6⅞" BRAKE VACUUM SERVO ASSEMBLY (4257-551)**		1	
AS.302/4H	**Screw,** securing Cover to Valve Housing (K.14303/RP)	21—1	8	
9205	**Cover and Valve Assembly** (106176)	21—2	1	
7163	**Return Spring,** for Diaphragm (89832)	21—3	1	
9206	**Gasket,** between Cover and Diaphragm (93737)	21—4	1	
9207	**Diaphragm Assembly** (93949)	21—5	1	
7160	**Gasket,** between Diaphragm and Valve Housing (88718)	21—6	1	
7167	**Balance Spring,** under Diaphragm (88734)	21—7	1	
UFS.125/4R	**Screw,** Set, securing Valve Housing to Slave Cylinder Body (K.23502/RP)	21—8	4	
C.739	**Washer,** Shakeproof, on Setscrews (K.19405)	21—9	4	
7169	**Valve Housing** (88805)	21—10	1	
C.738	**Washer,** Shakeproof, under Nuts (K.19404)	21—11	8	
AN.102/L	**Nut,** on Setscrews, securing Valve Cover (K.18604/RP)	21—12	8	
7168	**Gasket,** between Valve Housing and Slave Cylinder (88801)	21—13	1	
7161	**Valve Piston** (88719)	21—14	1	
8814	**Seal,** for Valve Piston (3862-423)	21—15	1	
6383	**Gasket,** between Slave Cylinder Body and Main Cylinder (32737)	21—16	1	
UFB.125/4R	**Bolt,** (Short) securing Cover to Main Cylinder (K.23502/RP)	21—17	3	
UFB.125/9R	**Bolt,** (Long), securing Cover to Main Cylinder, and for Mounting Servo Unit (23508/RP)	21—18	3	
7754	**Tab Washer,** locking Long Bolts (99361)	21—18A	3	
UFN.125/L	**Nut,** on Bolts (K.24001/RP.)	21—19	6	
C.724	**Washer,** Shakeproof, under Nuts (K.19405)	21—20	6	
7159	**Hose,** connecting Main Cylinder to Valve Cover (88199)	21—21	1	
7170	**Return Spring,** for Main Cylinder Piston (88806)	21—22	1	
7145	**Push Rod,** operating Main Cylinder Piston (86753)	21—23	1	
7691	**Adjusting Nut,** on Piston (88023)	21—24	1	
7273	**Locating Washer,** on Piston (88022)	21—25	1	
7692	**Outer Piston Plate,** in Main Cylinder (88731)	21—26	1	
7142	**'O' Ring,** between Piston Plates on Adjusting Nut (25844)	21—27	1	**MAY BE OBTAINED AS A COMPLETE ASSEMBLY TO PART No. 7146 (88799)**
8385	**Rubber Cup,** for Main Cylinder Piston (107149)	21—28	1	
7693	**Inner Piston Plate** in Main Cylinder (88732)	21—29	1	
7143	**Piston Ring,** in Main Cylinder (82138)	21—30	1	
7141	**Wick,** around Piston Ring (25835/21.25)	21—31	1	
7694	**End Stop,** for Main Cylinder Piston (88733)	21—32	1	
FW.108/T	**Washer,** Plain, under Shakeproof Washer (K.20809)	21—33	1	
C.743	**Washer,** Shakeproof, under Nut (K.19409)	21—34	1	
UFN.150/L	**Nut,** securing Main Piston Assembly (K.24105)	21—35	1	
2538	**Copper Gasket,** under Nut (KL.44509)	21—36	1	
UFN.125/L	**Nut,** on Push Rod (K.24101)	21—37	1	
7140	**Cover and Pipe,** for Main Cylinder (88798)	21—38	1	
8414	**Gasket,** between Cover and Main Cylinders (106213)	21—39	1	
UFS.131/6R	**Screw,** Set, securing Abutment Plate inside Cylinder (K.23603)	21—40	4	
6386	**Plate,** locking Setscrews (82454)	21—41	2	
6385	**Abutment Plate,** inside Main Cylinder (32739)	21—42	1	
7137	**Main Vacuum Cylinder** (88807) or (114498)	21—43	1	
6382	**Spigot,** for Slave Cylinder Piston (32736)	21—44	1	
7164	**Spring** (Short) between Seal at rear of Distance Piece (92954)	21—45	1	
6402	**Seal,** between Spring and Spigot (85946)	21—46	1	
7896	**Spreader,** for Seal (90860)	21—47	1	
6444	**Circlip,** locating Short Spring (86158) or (113067)	21—48	1	
7171	**Washer,** behind Distance Piece (96462)	21—49	1	
7165	**Distance Piece,** between Piston and Washer (97266)	21—50	1	
6380	**Piston,** for Slave Cylinder (82601)	21—51	1	
6379	**Seal,** between Piston and Spring Support (92328)	21—52	1	
9209	**Spring Support,** adjacent to Piston (109579)	21—53	1	
7156	**Main Spring,** in Slave Cylinder (91861) or (109881)	21—54	1	
C.11356	**Copper Gasket,** sealing Adaptor in end of Slave Cylinder (KL.44526)	21—55	1	
7166	**Adaptor,** in End of Slave Cylinder (88728)	21—56	1	
7155	**Slave Cylinder Body** (88764)	21—57	1	

6⅞″ BRAKE VACUUM SERVO

Part No.	Description	Plate No.	No. per Unit	Remarks
8055	**REPAIR KIT FOR SLAVE CYLINDER ON BRAKE VACUUM SERVO (KL.72548)**		1	
8415	**REPAIR KIT FOR MAIN CYLINDER PISTON (KL.72565)**		1	
9211	**REPAIR KIT FOR AIR CONTROL VALVE (KL.72551)**		1	
432113	**STEADY BRACKET FOR BRAKE VACUUM SERVO ASSEMBLY**		1	
422514/05	**Nut,** Nyloc, securing Servo Assembly to Steady Bracket and securing Steady Bracket to Floor		5	
432114	**Packing Piece,** for Servo Steady Bracket		1	
432110	**Clip,** for Servo Steady Bracket		1	
12104/06	**Screw,** Set, securing Clip		2	
432514/05	**Nut,** Nyloc, on Setscrews		2	

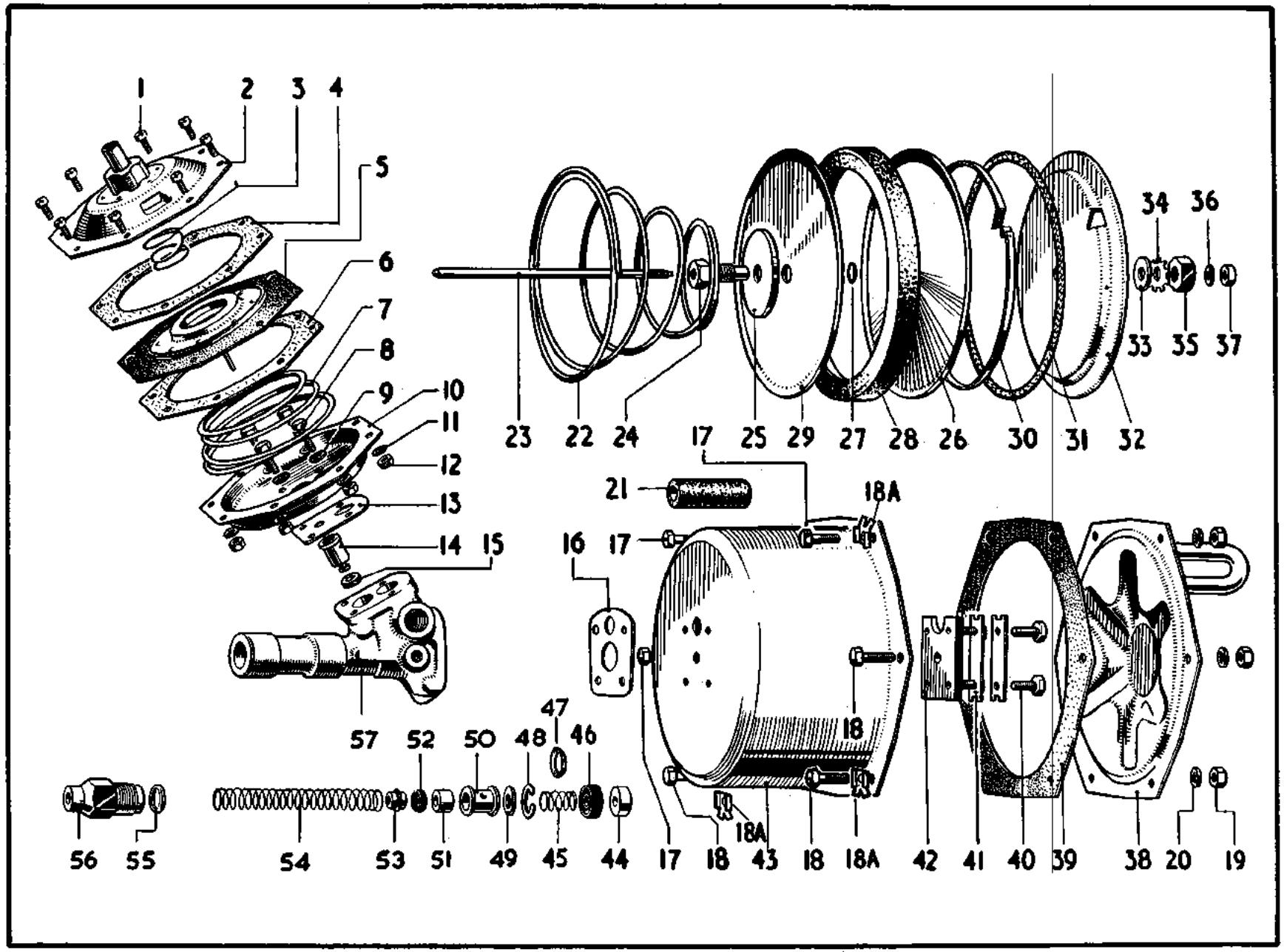
1
2
3
4
5
6
7
8
9
10
11
12
13
14
15
16
17
18
18A
19
20
21
22
23
24
25
26
27
28
29
30
31
32
33
34
35
36
37
38
39
40
41
42
43
44
45
46
47
48
49
50
51
52
53
54
55
56
57

PLATE 21

HANDBRAKE CONTROLS

Part No.	Description	Plate No.	No. per Unit	Remarks
136581	**HANDBRAKE LEVER AND SWITCH STRIKER PLATE ASSEMBLY**	22—1	1	
135977/05	**Trigger and Pawl Spring** (P.89833)		1	
135977/06	**Pawl** (P.109217)		1	
135977/07	**Fulcrum Screw**, for Pawl (P.101084)		1	
135977/08	**Nut**, for Fulcrum Screw (P.101198)		1	
135977/09	**Washer**, Spring, on Screw (2007)		1	
12105/06	**Screw**, Set, securing Handbrake Lever Assembly to Handbrake Attachment Plate		2	
13105	**Nut**, on Setscrews		2	
422500/02	**Washer**, Plain, on Setscrews		2	
430241/05	**Washer**, Spring, under Nuts		2	
92/635247	**HANDBRAKE LEVER MOUNTING BRACKET**	22—2	1	**R.H. DRIVE CARS ONLY**
92/635246	**HANDBRAKE CABLE ABUTMENT BRACKET**	22—3	1	**R.H. DRIVE CARS ONLY**
93/635247	**HANDBRAKE LEVER MOUNTING BRACKET**		1	**L.H. DRIVE CARS ONLY**
93/635246	**HANDBRAKE CABLE ABUTMENT BRACKET**		1	**L.H. DRIVE CARS ONLY**
12604/06	**Bolt**, securing Mounting and Abutment Brackets to Dash		2	
12104/10	**Bolt**, securing Mounting and Abutment Brackets and Steering Column Stay (Long)		1	
13104	**Nut**, on Bolts		3	
422500/01	**Washer**, Plain, under Nuts		3	
430241/04	**Washer**, Spring, under Nuts		3	

HANDBRAKE CONTROLS

Part No.	Description	Plate No.	No per Unit	Remarks
307769/2	**HANDBRAKE CABLE ASSEMBLY**	22—4	1	
422531/17	**Clevis Pin,** securing Cable to Handbrake Lever	22—5	1	
431123	**Washer,** Plain, on Clevis Pin		1	
422501/13	**Split Pin,** retaining Clevis Pin		1	
422531/16	**Clevis Pin,** securing Cable to Handbrake Operating Lever	22—6	1	
422500/02	**Washer,** on Clevis Pin		1	
422501/13	**Split Pin,** retaining Clevis Pin		1	
408619	**Clip,** securing Handbrake Cable to Valance		1	
422545/13	**Bolt,** securing Clip to Valance		1	**L.H. DRIVE CARS ONLY**
422543/2	**Nut,** on Bolt		1	
430241/03	**Washer,** Spring, under Nut		1	
432187/24	**Screw,** securing Clip to Valance		1	**R.H. DRIVE CARS ONLY**
308501	**BRACKET MOUNTING HANDBRAKE OPERATING LEVER ON CHASSIS**	22—7	1	**R.H. DRIVE CARS ONLY**
307791	**BRACKET MOUNTING HANDBRAKE OPERATING LEVER ON CHASSIS**		1	**L.H. DRIVE CARS ONLY**
12105/06	**Screw,** Set, securing Bracket to Chassis		4	
13105	**Nut,** on Setscrews		4	
430241/05	**Washer,** Spring, under Nuts		4	
431129	**HANDBRAKE OPERATING LEVER ASSEMBLY**	22—8	1	
0810/12	**Bush,** for Lever		1	
430987	**Shaft,** for Handbrake Operating Lever	22—9	1	
13306	**Nut,** Slotted, on Shaft		1	
422500/03	**Washer,** Plain, under Nut		1	
422501/07	**Split Pin,** securing Nut		1	
422166/12	**ROD, CONNECTING OPERATING LEVER TO CENTRE IDLER LEVER**	22—10	1	
422529/1	**Fork End,** on front end of Brake Rod	22—11	1	
431114	**Eye End,** on rear end of Brake Rod	22—12	1	**DQ.450/1 ONLY**
13105	**Locknut,** securing Fork and Eye Ends	22—13	2	
422531/17	**Clevis Pin,** securing Fork End to Operating Lever	22—14	1	
422531/18	**Clevis Pin,** securing Eye End to Centre Idler Lever	22—15	1	
422500/02	**Washer,** Plain, on Clevis Pins		2	
422501/13	**Split Pin,** retaining Clevis Pins		2	

HANDBRAKE CONTROLS

Part No.	Description	Plate No.	No. per Unit	Remarks
422166/15	**ROD, CONNECTING OPERATING LEVER TO FRONT IDLER LEVER**		1	
422529/1	**Fork End,** on Brake Rod		2	
13105	**Locknut,** securing Fork Ends		2	**DR.450/1 ONLY**
422531/17	**Clevis Pin,** securing Fork Ends to Operating Lever and Front Idler Lever		2	
422500/02	**Washer,** Plain, on Clevis Pins		2	
422501/13	**Split Pin,** retaining Clevis Pins		2	
423179/4	**Grommet,** in Chassis for Rod		1	
417488	**Grommet,** in Chassis for Rod		1	
432721	**Grommet,** in Chassis for Rod		1	**DQ.450/1 ONLY**
432825	**FRONT IDLER LEVER**		1	**DR.450 ONLY**
10-DU-08	**Bush,** in Lever		1	
432827	**FRONT IDLER LEVER**		1	**DR.451 ONLY**
10-DU-08	**Bush,** in Lever		1	
307784	**Shaft,** for Front Idler Lever		1	
422514/09	**Nut,** Nyloc, securing Shaft to Chassis		1	
13308	**Nut,** Slotted, securing Idler Lever to Shaft		1	**DR.450/1 ONLY**
422500/05	**Washer,** Plain, under Nut		1	
422501/17	**Split Pin,** retaining Nut		1	
422166/16	**ROD, FROM FRONT IDLER LEVER TO CENTRE IDLER LEVER**		1	
422529/1	**Fork End,** on Brake Rod		2	**DR.450/1 ONLY**
13105	**Locknut,** securing Fork Ends		2	
422531/17	**Clevis Pin,** securing Fork Ends to Idler Levers		2	
422500/02	**Washer,** Plain, on Clevis Pins		2	
422501/13	**Split Pin,** retaining Clevis Pins		2	
432829	**CENTRE IDLER LEVER ASSEMBLY**		1	**DR.450/1 ONLY**
10-DU-08	**Bush,** in Lever		1	
432104	**CENTRE IDLER LEVER ASSEMBLY**		1	Fitted from Chassis No. 136711 to 137011 DQ.450 And to all DQ.451
1012/16	**Bush,** in Lever		1	

HANDBRAKE CONTROLS

Part No.	Description	Plate No.	No. per Unit	Remarks
432802	**CENTRE IDLER LEVER ASSEMBLY**	22—16	1	Fitted to Chassis No. 137012 and subs. DQ.450
10-DU-08	**Bush,** in Lever		1	
307784	**Shaft,** for Idler Lever	22—17	1	
422514/09	**Nut,** Nyloc, securing Shaft to Chassis		1	
13308	**Nut,** Slotted, securing Idler Lever to Shaft		1	
422500/05	**Washer,** Plain, under Nut		1	
422501/17	**Split Pin,** retaining Nut		1	
422166/13	**ROD, FROM CENTRE IDLER LEVER TO REAR IDLER LEVER**		1	Fitted from Chassis No. 136711 to 137011 DQ.450 And to all DQ.451
422529/1	**Fork End,** on Brake Rod		2	
13105	**Locknut,** securing Fork Ends		2	
422531/21	**Clevis Pin,** securing Rear Fork End to Rear Idler Lever		1	
422500/02	**Washer,** Plain, on Clevis Pin		1	
422501/13	**Split Pin,** retaining Clevis Pin		1	
422166/3	**ROD, FROM CENTRE IDLER LEVER TO REAR IDLER LEVER**	22—18	1	Fitted to Chassis No. 137012 and subs. DQ.450 And to all DR.450/1
422529/1	**Fork End,** on Brake Rod	22—19	2	
13105	**Locknut,** securing Fork Ends	22—20	2	
422531/19	**Clevis Pin,** securing rear Fork End to Rear Idler Lever	22—21	1	
422500/02	**Washer,** Plain, on Clevis Pin		1	
422501/13	**Split Pin,** retaining Clevis Pin		1	
432068	**REAR IDLER LEVER ASSEMBLY**		1	Fitted from Chassis No. 136711 to 137011 DQ.450 And to all DQ.451
0810/12	**Bush,** in Lever		1	
430987	**Pivot Pin,** securing Rear Idler Lever to Rear Axle		1	
13306	**Nut,** Slotted, securing Pivot Pin		1	
422500/03	**Washer,** Plain, on Pivot Pin		1	
422501/17	**Split Pin,** retaining Nut		1	
423001	**REAR IDLER LEVER ASSEMBLY**	22—22	1	Fitted to Chassis No. 137012 and subs. DQ.450 And to all DR.450/1
422531/20	**Clevis Pin,** securing Rear Idler Lever to Rear Axle	22—23	1	
422500/02	**Washer,** Plain, on Clevis Pin		1	
422501/13	**Split Pin,** retaining Clevis Pin		1	

HANDBRAKE CONTROLS

Part No.	Description	Plate No.	No. per Unit	Remarks
432075	**REAR BRAKE LINK**		1	Fitted from Chassis No. 136711 to 137011 DQ.450 And to all DQ.451
432107	**Clevis Pin,** securing Brake Link to Rear Idler Lever		1	
422531/21	**Clevis Pin,** securing Brake Link to Bell Crank Lever		1	
422500/02	**Washer,** Plain, on Clevis Pins		2	
422501/13	**Split Pin,** retaining Clevis Pins		2	
423060	**REAR BRAKE LINK**	22—24	1	Fitted to Chassis No. 137012 and subs. DQ.450 And to all DR.450/1
422531/17	**Clevis Pin,** securing Link to Bell Crank Lever	22—25	1	
422500/02	**Washer,** Plain, on Clevis Pin		1	
422501/13	**Split Pin,** retaining Clevis Pin		1	
308497	**BELL CRANK LEVER SWIVEL**		1	Fitted from Chassis No. 136711 to 137011 DQ.450 And to all DQ.451
422500/05	**Washer,** Plain, between Swivel and Rear Axle		1	
422501/16	**Split Pin,** securing Swivel to Rear Axle		1	
432803	**BELL CRANK LEVER SWIVEL ASSEMBLY**	22—26	1	Fitted to Chassis No. 137012 and subs. DQ.450 And to all DR.450/1
08-DU-10	**Bush** in Swivel		1	
423059	**Swivel Pin**	22—27	1	
13306	**Nut,** securing Swivel to Rear Axle		1	
422500/03	**Washer,** on Swivel		1	
422501/07	**Split Pin,** retaining Nut		1	
13308	**Nut,** securing Bell Crank Lever to Swivel		1	
422500/05	**Washer,** on Swivel		2	
422501/16	**Split Pin,** retaining Nut and Swivel Pin		2	
432059	**BELL CRANK LEVER ASSEMBLY**		1	Fitted from Chassis No. 136711 to 137011 DQ.450 And to all DQ.451
0810/12	**Bush,** in Lever		1	

HANDBRAKE CONTROLS

Part No.	Description	Plate No.	No. per Unit	Remarks
309054	**BELL CRANK LEVER ASSEMBLY**	22—28	1	Fitted to Chassis No. 137012 and subs. DQ.450 And to all DR.450/1
08-DU-10	**Bush, in Lever**		1	
422500/05	**Washer,** Plain, between Lever and Swivel		1	
422501/16	**Split Pin,** retaining Bell Crank Lever		1	
430469	**SPRING, RETURNING BELL CRANK LEVER**	22—29	1	
432076	**ROD, FROM BELL CRANK LEVER TO R.H. REAR CALIPER**		1	Fitted from Chassis No. 136711 to 137011 DQ.450
432077	**ROD, FROM BELL CRANK LEVER TO L.H. REAR CALIPER**		1	
432076	**ROD, FROM BELL CRANK LEVER TO L.H. REAR CALIPER**		1	**DQ.451 ONLY**
432077	**ROD, FROM BELL CRANK LEVER TO R.H. REAR CALIPER**		1	
430972	**ROD FROM BELL CRANK LEVER TO R.H. REAR CALIPER**	22—30	1	Fitted to Chassis No. 137012 and subs. DQ.450 And to all DR.450
430973	**ROD FROM BELL CRANK LEVER TO L.H. REAR CALIPER**	22—31	1	

HANDBRAKE CONTROLS

Part No.	Description	Plate No.	No. per Unit	Remarks
430972	**ROD FROM BELL CRANK LEVER TO L.H. REAR CALIPER**		1	DR.451 ONLY
430973	**ROD FROM BELL CRANK LEVER TO R.H. REAR CALIPER**		1	DR.451 ONLY
422529/1	**Fork End** on Rods	22—32	2	
13105	**Locknut,** securing Fork Ends to Rods	22—33	2	
422531/16	**Clevis Pin,** securing Fork Ends to Bell Crank Lever and Rod to Rear Calipers	22—34	4	
277152	**Washer,** Spring, on Clevis Pins		4	
422501/15	**Split Pin,** retaining Clevis Pins		4	

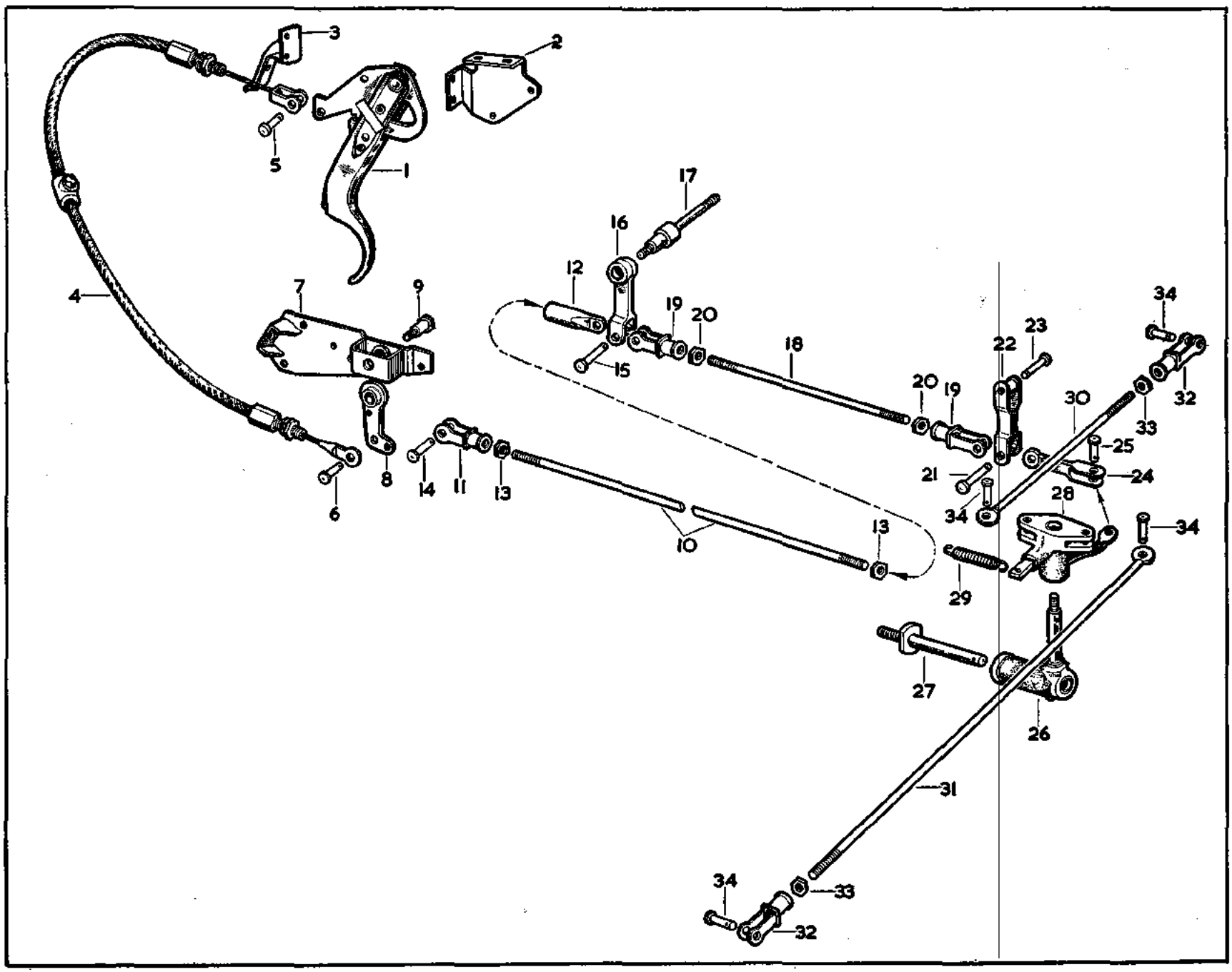
1
2
3
4
5
6
7
8
9
10
11
12
13
14
15
16
17
18
19
20
21
22
23
24
25
26
27
28
29
30
31
32
33
34

PLATE 22

STEERING UNIT AND LINKAGE

Part No.	Description	Plate No.	No. per Unit	Remarks
136328	**STEERING UNIT ASSEMBLY (SF.470)**		1	**DQ.450—DR.450 ONLY**
136328/01	**Outer Tube Assembly** (28-12-110)	23—1	1	
135078/02	**Steering Box** (Bare) (S-1-78)	23—2	1	
135078/03	**Stud,** securing End Plate and Tube Housing to Steering Box (13-4-3)	23—3	8	
135078/04	**Stud,** securing Cover Plate to Steering Box (13-3-6)	23—4	4	
135078/05	**End Plate,** at Lower End of Steering Box (S-11-42)	23—5	1	
135078/06	**Gasket,** for End Plate and Tube Housing (S-10-55)	23—6	2	
135078/07	**Shim,** for End Plate (S-10-56)	23—7	As req'd	
135078/08	**Nut,** on Studs (11-4-4)		8	
103	**Washer,** Spring, under Nuts (12-4-1)		8	
255	**Stud,** in End Plate (13-2-2)	23—8	2	
135078/11	**Bracket,** securing Stator Tube at Lower End (S-15-5)	23—9	1	
90	**Nut,** on Studs (11-2-1)		2	
101	**Washer,** Spring, under Nuts (12-2-1)		2	
82	**Clamp Bolt,** through Bracket (10-1-1)	23—10	1	
89	**Nut,** securing Clamp Bolt (11-1-1)	23—11	1	
100	**Washer,** Spring, under Nut (12-1-1)	23—12	1	
135078/18	**Oil Seal,** in End Plate Bracket (27-4-1)	23—13	1	
135078/19	**Cover Plate,** on Steering Box (S-12-24)	23—14	1	
135078/20	**Gasket,** between Cover Plate and Steering Box (S-10-19)	23—15	1	
135078/21	**Nut,** on Studs (11-3-5)		4	
FG.105/X	**Washer,** Spring, under Nuts (12-3-1)		4	
135078/23	**Washer,** Plain, on Studs (12-3-5)		4	
6426	**Adjusting Screw,** for Rocker Shaft (25-7-2)	23—16	1	
135078/25	**Nut,** securing Adjusting Screw (11-7-2)	23—17	1	
135078/26	**Tab Washer,** securing Nut (12-8-34)	28—18	1	
135078/27	**Plug,** Oil Filler (21-8-3)	23—19	1	
136328/02	**Inner Column** (S-3-325)	23—20	1	
135078/29	**Bush,** locating Inner Column (19-9-14)	23—21	1	
135078/31	**Race,** at Lower End of Column (S-23-9)	23—22	2	
137	**Ball,** Steel, for Race (17-4-1)	23—23	20	
135078/33	**Main Nut and Transfer Tube Assembly** (S-2-35)	23—24	1	
146	**Roller,** on Main Nut (24-5-1)	23—25	1	
137	**Ball,** Steel, for Main Nut (17-4-1)	23—26	14	
135078/35	**Rocker Shaft** (S-7-43)	23—27	1	
135078/36	**Bush,** in Steering Box (19-9-7)	23—28	1	
135078/37	**Bush,** for Trunnion (19-9-4)	23—29	1	
4101	**Oil Seal,** in Steering Box (27-9-4)	23—30	1	
135078/39	**Drop Arm** (S-9-100)	23—31	1	
135078/40	**Nut,** securing Drop Arm (11-8-7)	23—32	1	
135078/41	**Tab Washer,** securing Nut (12-8-36)	23—33	1	
136375	**STEERING UNIT ASSEMBLY (SF.471)**		1	**DQ.451—DR.451 ONLY**
135099/01	**Cover Plate,** on Steering Box (S-12-25)		1	
136375/01	**Inner Column** (S-3-328)		1	
3939	**Main Nut,** and Transfer Tube Assembly (S-2-2)		1	
135099/04	**Drop Arm** (S-9-104)		1	
	All other items as for Steering Unit Assembly 136328.			
C.20950	**DRAUGHT EXCLUDER FOR STEERING COLUMN**		1	

STEERING UNIT AND LINKAGE

Part No.	Description	Plate No.	No. per Unit	Remarks
432139	**DRAUGHT EXCLUDER SUPPORT PLATE**		1	
12104/06	**Bolt,** securing Plate		6	
422500/01	**Washer,** on Bolts		3	
308445	**STEERING COLUMN CONTROL ASSEMBLY (33565A)**	23—35	1	
133909/01	**Top Cover Assembly** (323877)		1	
133055/04	**Horn Push Contact** (321824)		1	
2843	**Rotor Plunger** (322150)		1	
2877	**Pawl and Spring Set** (324527)		1	
308446	**STATOR TUBE ASSEMBLY (54300529)**	23—36	1	
134295	**STEERING WHEEL ASSEMBLY**	23—37	1	
131752/01	**Clamp Lever,** Bolt, Nut and Washer	23—38	1	
134295/01	**Dust Cover,** Telescopic, between Outer Tube and Steering Wheel	23—39	1	
134295/02	**Cup,** at Top of Telescopic Dust Cover	23—40	1	
134295/03	**Cup,** at bottom of Telescopic Dust Cover	23—41	1	
272590	**Circlip,** retaining Steering Wheel on Inner Tube	23—42	1	
424806	**Grubscrew,** Steering Wheel	23—43	2	
423586	**STEERING PIVOT LEVER AND BUSH ASSEMBLY**	23—44	1	**DQ.450—DR.450 ONLY**
420940	**Bush,** in Pivot Lever		2	

STEERING UNIT AND LINKAGE

Part No.	Description	Plate No.	No. per Unit	Remarks
422981	**STEERING PIVOT LEVER AND BUSH ASSEMBLY**		1	
420940	**Bush,** in Pivot Lever		2	
425659	**Pivot Pin,** securing Pivot Lever	23—45	1	
422136	**Washer,** Bronze, at both faces of Lever Boss	23—46	2	
13308	**Nut,** Slotted, securing Pivot Pin to Frame		1	
422500/05	**Washer,** Plain, under Nut		1	
422501/16	**Split Pin,** retaining Nut		1	
422521/39	**Grease Nipple,** on Pivot Lever	23—47	1	
308490	**DRAG LINK ASSEMBLY**	23—48	1	
308490/01	**Drag Link**	23—49	1	
302624/01	**Locknut,** R.H. (KL.46008)		1	
302624/02	**Locknut,** L.H. (KL.46038)	23—50	1	
307029/01	**Socket Assembly,** R.H. (J.5973)		1	
307029/02	**Socket Assembly,** L.H. (J.5974)	23—51	1	
302624/06	**Rubber Boot and Washer** (J.5503)	23—52	2	
302624/07	**Clip,** securing Boot (J.4036)	23—53	2	
302624/08	**Nut,** securing Socket Assembly to Pivot Lever (KL.18809)	23—54	2	
422501/17	**Split Pin,** retaining Nuts	23—55	2	
422521/39	**Grease Nipple,** on Drag Link (Tec. HA.39)	23—56	2	
307029	**TRACK ROD ASSEMBLY (JS.595P/23.4")**	23—57	2	
302624/01	**Track Rod**	23—58	2	
302624/02	**Locknut,** R.H. (KL.46008)	23—59	2	
302624/03	**Locknut,** L.H. (KL.46038)	23—60	2	
307029/01	**Socket Assembly,** R.H. (J.5973)	23—61	2	
307029/02	**Socket Assembly,** L.H. (J.5974)	23—62	2	
302624/06	**Rubber Boot and Washer** (J.5503)	23—63	4	
302624/07	**Clip,** securing Boots (J.4036)	23—64	4	
302624/08	**Nut,** securing Socket Assembly to Pivot Lever and to Steering Arms (KL.18809)	23—65	4	
422501/17	**Split Pin,** retaining Nuts	23—66	4	
422521/39	**Grease Nipple,** on Inner end of Track Rod (Tec. HA-39)	23—67	2	
422521/29	**Grease Nipple,** on Outer end of Track Rod (Tec. HA-29)	23—68	2	

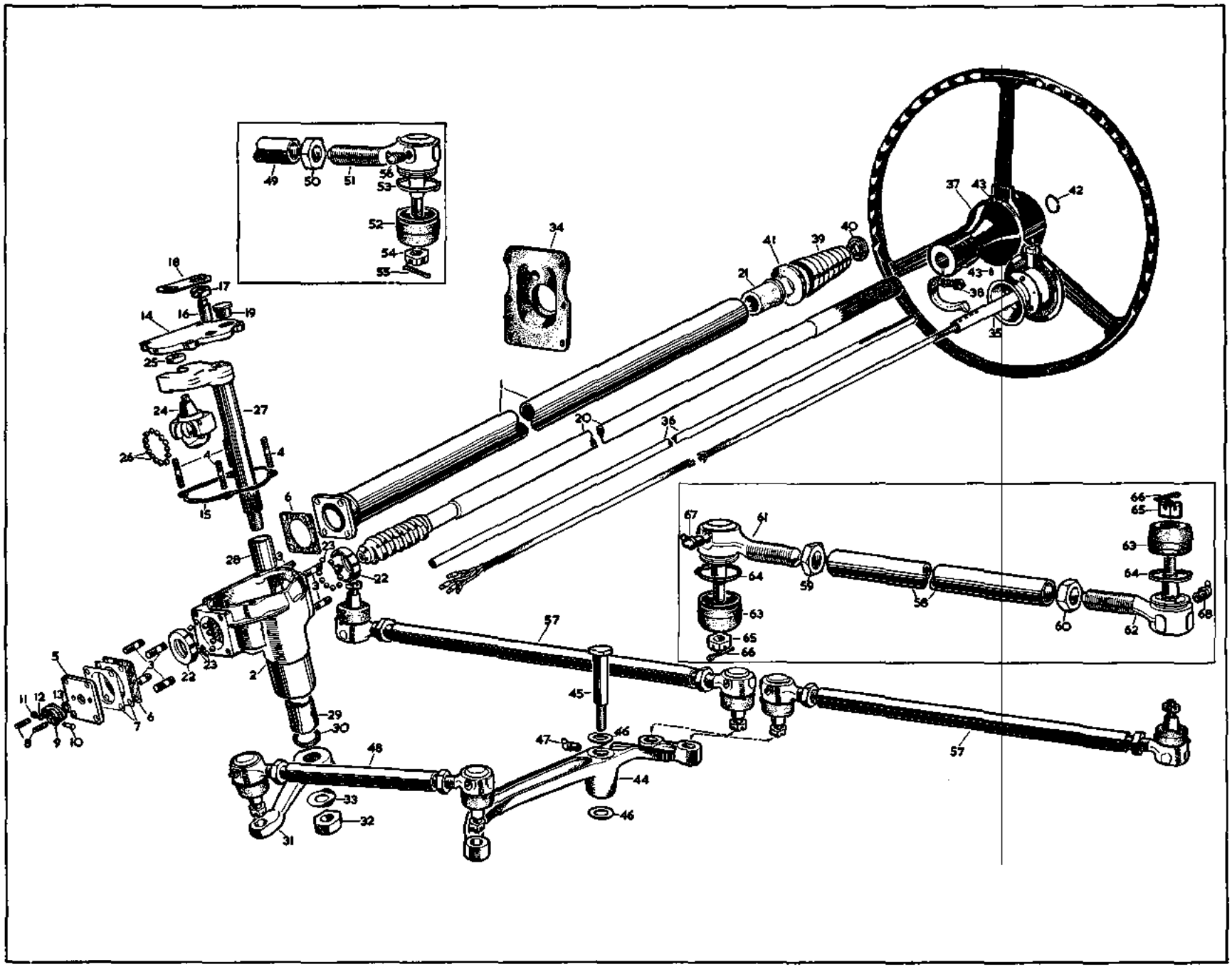
49
50
51
56
53
52
54
55
34
37
43
42
41
39
40
21
43-8
38
35
18
17
16
19
14
25
24
27
26
4
15
6
20
36
28
3
23
22
67
61
64
59
58
63
65
66
60
62
68
5
11
12
13
8
9
10
7
2
29
30
45
47
46
48
44
33
32
31
57

PLATE 23

STEERING UNIT, LINKAGE AND HYDRAULIC RAM (HYDROSTEER)

Part No.	Description	Plate No.	No. per Unit	Remarks
136328	**STEERING UNIT ASSEMBLY (SF.470)**		1	**DQ.450—DR.450 ONLY**
136328/01	**Outer Tube Assembly** (28-12-110)	24—1	1	
135078/01	**Steering Box** (Bare) (S-1-78)	24—2	1	
135078/03	**Stud,** securing End Plate and Tube Housing to Steering Box (13-4-3)	24—3	8	
135078/04	**Stud,** securing Cover Plate to Steering Box (13-3-6)	24—4	4	
135078/05	**End Plate,** at Lower End of Steering Box (S-11-42)	24—5	1	
135078/06	**Gasket,** for End Plate and Tube Housing (S-10-55)	24—6	2	
135078/07	**Shim,** for End Plate (S-10-56)	24—7	As req'd	
135078/08	**Nut,** on Studs (11-4-4)		8	
103	**Washer,** Spring under Nuts (12-4-1)		8	
255	**Stud,** in End Plate (13-2-2)	24—8	2	
135078/11	**Bracket,** securing Stator Tube at Lower End (S-15-5)	24—9	1	
90	**Nut,** on Studs (11-2-1)		2	
101	**Washer,** under Nuts (12-2-1)		2	
82	**Clamp Bolt** through Bracket (10-1-1)	24—10	1	
89	**Nut,** securing Clamp Bolt (11-1-1)	24—11	1	
100	**Washer,** Spring, under Nut (12-1-1)	24—12	1	
135078/18	**Oil Seal,** in End Plate (27-4-1)	24—13	1	
135078/19	**Cover Plate,** on Steering Box (S-12-24)	24—14	1	
135078/20	**Gasket,** between Cover Plate (S.-10-19)	24—15	1	
135078/21	**Nut,** on Studs (11-3-5)		4	
FG.105/X	**Washer,** Spring, under Nuts (12-3-1)		4	
135078/23	**Washer,** Plain, under Nuts (12-3-5)		4	
6426	**Adjusting Screw,** for Rocker Shaft (25-7-2)	24—16	1	
135078/25	**Nut,** securing Adjusting Screw (11-7-2)	24—17	1	
135078/26	**Tab Washer,** securing Nut (12-8-34)	24—18	1	
135078/27	**Plug,** Oil Filler (21-8-3)	24—19	1	
136328/02	**Inner Column** (S-3-325)	24—20	1	
135078/29	**Bush,** Location Inner Column (19-9-14)	24—21	1	
135078/31	**Race,** at Lower End of Column (S-23-9)	24—22	2	
137	**Ball,** Steel, for Races (17-4-1)	24—23	20	
135078/33	**Main Nut** and Transfer Tube Assembly (S-2-35)	24—24	1	
146	**Roller,** on Main Nut (24-5-1)	24—25	1	
137	**Ball,** Steel, for Main Nut (17-4-1)	24—26	14	
135078/35	**Rocker Shaft** (S-7-43)	24—27	1	
135078/36	**Bush,** in Steering Box (19-9-7)	24—28	1	
135078/37	**Bush,** for Trunnion (19-9-4)	24—29	1	
4101	**Oil Seal,** in Steering Box (27-9-4)	24—30	1	
135078/39	**Drop Arm** (S-9-100)	24—31	1	
135078/40	**Nut,** securing Drop Arm (11-8-7)	24—32	1	
135078/41	**Tab Washer,** securing Nut (12-8-36)	24—33	1	
136375	**STEERING UNIT ASSEMBLY (SF.471)**		1	**DQ.451—DR.451 ONLY.**
135099/01	**Cover Plate,** on Steering Box (S-12-25)		1	
136375/01	**Inner Column** (S-3-328)		1	
3959	**Main Nut and Transfer Tube Assembly** (3-2-2)		1	
135099/40	**Drop Arm** (S-9-104)		1	
	All other items as for Steering Unit Assembly (136328)			
C.20950	**DRAUGHT EXCLUDER FOR STEERING COLUMN**		1	

STEERING UNIT, LINKAGE AND HYDRAULIC RAM (HYDROSTEER)

Part No.	Description	Plate No.	No. per Unit	Remarks
432139	**DRAUGHT EXCLUDER SUPPORT PLATE**		1	
12104/06	**Bolt,** securing Plate		6	
422500/01	**Washer,** on Bolts		3	
308445	**STEERING COLUMN CONTROL ASSEMBLY (33565)**	24—35	1	
133909/01	**Top Cover Assembly** (323877)		1	
133055/04	**Horn Push Contact** (321824)		1	
2843	**Rotor Plunger** (322150)		1	
2877	**Pawl and Spring Set** (324527)		1	
308446	**STATOR TUBE ASSEMBLY (54300529)**	24—36	1	
427299	**Bush,** Rubber, for Stator Tube		3	
134295	**STEERING WHEEL ASSEMBLY**	24—37	1	
131752/01	**Clamp Lever,** Bolt, Nut and Washer	24—38	1	
134295/01	**Telescopic Dust Cover,** on Column	24—39	1	
134295/02	**Cup,** Top, for Dust Cover	24—40	1	
134295/03	**Cup,** Bottom, for Dust Cover	24—41	1	
272590	**Circlip,** retaining Steering Wheel on Inner Tube	24—42	1	
424806	**Grub Screw,** Steering Wheel	24—43	2	
423586	**STEERING PIVOT LEVER AND BUSH ASSEMBLY**	24—44	1	Fitted from Chassis No. 136711 to 137292 DQ.450; 136011 to 136229 DR.450
420940	**Bush,** in Lever		2	
422981	**STEERING PIVOT LEVER AND BUSH ASSEMBLY**		1	Fitted to all DQ.451 and from Chassis No. 136011 to 136229 DR.451
420940	**Bush,** in Lever		1	
432919	**STEERING PIVOT LEVER AND BUSH ASSEMBLY**		1	Fitted to Chassis No. 137293 and subs. DQ.450; 136230 and subs. DR.450

STEERING UNIT, LINKAGE AND HYDRAULIC RAM (HYDROSTEER)

Part No.	Description	Plate No.	No. per Unit	Remarks
432920	**STEERING PIVOT LEVER AND BUSH ASSEMBLY**		1	Fitted to Chassis No. 136230 and subs. DR.451
425659	**Pivot Pin,** securing Pivot Lever	24—45	1	
422136	**Washer,** Bronze, on both faces of Lever	24—46	2	
13308	**Nut,** Slotted, securing Pivot Pin to Frame		1	
422500/05	**Washer,** Plain, under Nut		1	
422501/16	**Split Pin,** retaining Nut		1	
422521/39	**Grease Nipple,** for Pivot Lever	24—47	1	
308922	**DRAG LINK ASSEMBLY**	24—48	1	Fitted from Chassis No. 136711 to 137292 DQ.450; 136011 to 136229 DR.450
302626/01	**Drag Link** (JE.2703)	24—49	1	
302624/02	**Locknut,** R.H. (KL.46008)	24—50	1	
302624/03	**Locknut,** L.H. (KL.46038)	24—51	1	
432283	**Drag Link,** End, R.H.	24—52	1	
307029/02	**Socket Assembly,** L.H. (J.5974)	24—53	1	
302624/06	**Rubber Boot and Washer** (J.5503)	24—54	1	
302624/07	**Clip,** securing Boot (J.4036)	24—55	1	
302624/08	**Nut,** securing Socket Assembly to Pivot Lever (KL.18809)	24—56	1	
422501/17	**Split Pin,** retaining Nut	24—57	1	
422521/39	**Grease Nipple** (Tec. HA.39)	24—58	1	
308923	**DRAG LINK ASSEMBLY**		1	Fitted to all DQ.451 and from Chassis No. 136011 to 136229 DR.451
307029/01	**Socket Assembly** (J.5973)		1	
432501	**Drag Link End**		1	
	All other items as for Drag Link Assembly 308922			
309095	**DRAG LINK ASSEMBLY**		1	Fitted to Chassis No. 137293 and subs. DQ.450; 136230 and subs. DR.450
308490/01	**Drag Link**		1	
	All other items as for Drag Link Assembly 308922			
309159	**DRAG LINK ASSEMBLY**		1	Fitted to Chassis No. 136230 and subs. DR.451
308490/01	**Drag Link**		1	
	All other items as for Drag Link Assembly 308923			

STEERING UNIT, LINKAGE AND HYDRAULIC RAM (HYDROSTEER)

Part No.	Description	Plate No.	No. per Unit	Remarks
307029	**TRACK ROD ASSEMBLY (JS.595P/23.4")**	24—59	2	
302624/01	**Track Rod**	24—60	2	
302624/02	**Locknut,** R.H. (KL.46008)	24—61	2	
302624/03	**Locknut,** L.H. (KL.46038)	24—62	2	
307029/01	**Socket Assembly,** R.H. (J.5973)	24—63	2	
307029/02	**Socket Assembly,** L.H. (J.5974)	24—64	2	
302624/06	**Rubber Boot and Washer** (J.5503)	24—65	4	
302624/07	**Clip,** securing Boots (J.4036)	24—66	4	
302624/08	**Nut,** securing Socket Assembly to Pivot Lever and to Steering Arms (KL.18809)	24—67	4	
422501/17	**Split Pin,** retaining Nuts	24—68	4	
422521/39	**Grease Nipple,** (Tec. HA-39) on Inner End of Track Rod	24—69	2	
422521/29	**Grease Nipple,** (Tec. HA-29) on Outer End of Track Rod	24—70	2	
136617	**HYDRAULIC RAM ASSEMBLY (VC.120038)**	24—71	1	**R.H. DRIVE CARS ONLY**
9383	**Anchor Rubber** (S.114/1) Inner and Outer between Anchor Washers and Anchor Bracket		2	
9384	**Anchor Washer,** Inner (S.102/15) retaining Anchor Rubber		1	
9385	**Anchor Washer,** Outer (S.102/16) retaining Anchor Rubber		1	
UFN.450/L	**Nut,** Slotted, securing Hydraulic Ram to Anchor Bracket (S.103/4)		1	
L.104/8U	**Split Pin,** retaining Nut		1	
136618	**HYDRAULIC RAM ASSEMBLY (VC.120039)**		1	**L.H. DRIVE CARS ONLY**
	All individual Items as for Hydraulic Ram Assembly 136617			
309166	**ANCHOR BRACKET ASSEMBLY, MOUNTING HYDRAULIC RAM TO FRAME**	24—72	1	**R.H. DRIVE CARS ONLY**
309169	**ANCHOR BRACKET ASSEMBLY, MOUNTING HYDRAULIC RAM TO FRAME**		1	**L.H. DRIVE CARS ONLY**

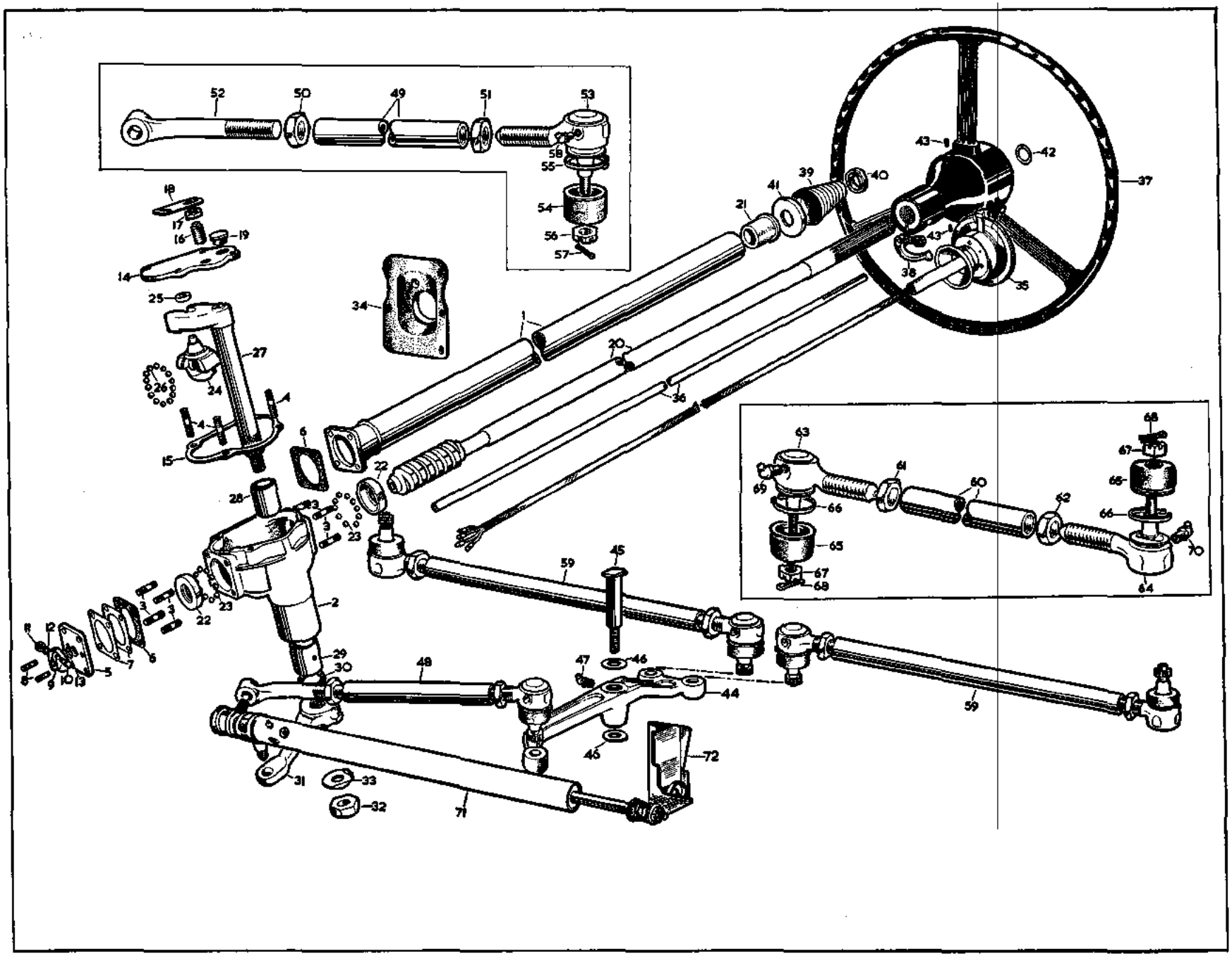
52
50
49
51
53
58
55
54
56
57
18
17
16
19
14
25
27
24
26
4
15
34
1
20
36
6
22
28
23
3
2
29
30
31
33
32
71
48
47
46
44
45
59
72
21
41
39
40
43
42
37
38
35
63
69
66
61
60
62
68
67
65
64
70

PLATE 24

RESERVOIR ASSEMBLY (HYDROSTEER)

Part No.	Description	Plate No.	No. per Unit	Remarks
136439	**RESERVOIR ASSEMBLY FOR OIL FEED TO HYDRAULIC RAM ASSEMBLY (P.417224B) (HE.1746/6)**	25—1	1	
8238	**Filler Cap** (complete with level indicator) (HE.1491)	25—2	1	
7753	**Gasket**, on Cover Bolt (HE.1324)	25—3	1	
7751	**Gasket**, under Cover (HE.1306)	25—4	1	
7752	**Filter** (HE.1307)	25—5	1	
7545	**'O' Ring**, between Reservoir and Body (HE.1322)	25—6	1	
9345	**'O' Ring**, on Outlet Adaptor (HE.5390)	25—7	1	
9344	**'O' Ring**, on Inlet Adaptor (HE.5389)	25—8	1	
9346	**Bolt**, securing Reservoir to Cast Bracket (HE.1328)		2	
9347	**Gasket**, on Bolts (HE.1323)		2	
12104/08	**Bolt**, securing Reservoir Assembly to Support Bracket		3	
422514/05	**Nut**, Nyloc, on Bolts		3	
432291	**SUPPORT BRACKET FOR RESERVOIR ASSEMBLY**	25—9	1	
12104/05	**Bolt**, securing Support Bracket to Valance		4	
422514/05	**Nut**, Nyloc, on Bolts		4	
309172	**HIGH PRESSURE HOSE ASSEMBLY FROM PUMP TO HYDRAULIC UNIT (UP.334)**	25—10	1	**R.H. DRIVE CARS ONLY**
432970	**Packing Sleeve** (Rubber) on H.P. Hose, under Clips		2	
309218	**HIGH PRESSURE HOSE ASSEMBLY FROM PUMP TO HYDRAULIC UNIT (UP.305)**		1	**L.H. DRIVE CARS ONLY**
432970	**Packing Sleeve** (Rubber) on H.P. Hose, under Clip		1	
433597	**LOW PRESSURE HOSE ASSEMBLY FROM RESERVOIR TO PUMP (UP.316)**	25—11	1	
308830	**LOW PRESSURE HOSE ASSEMBLY FROM RESERVOIR TO HYDRAULIC UNIT (UP.302)**	25—12	1	**R.H. DRIVE CARS ONLY**

RESERVOIR ASSEMBLY (HYDROSTEER)

Part No.	Description	Plate No.	No. per Unit	Remarks
308830/01	**BANJO, FOR LOW PRESSURE HOSE ASSEMBLY (HDC.247)**	25—13	1	**R.H. DRIVE CARS ONLY**
308830/02	**Banjo Bolt** (HDS.955)	25—14	2	
308830/03	**Washer,** Sealing, on each face of Banjo (PP.45—8)	25—15	4	
432982	**LOW PRESSURE HOSE ASSEMBLY FROM RESERVOIR TO HYDRAULIC UNIT (UP.306)**		1	**L.H. DRIVE CARS ONLY**
422522/03	**Clip,** securing L.P. Hose to Pump	25—16	1	
422522/04	**Clip,** securing L.P. Hoses to Reservoir	25—17	2	
401174	**Clip,** (Buckle) on H.P. and L.P. Hoses adjacent to Hydraulic Unit		2	
401174	**Clip,** (Buckle) on L.P. Hoses adjacent to Pump and Reservoir		2	
432784	**HOSE CLIP ASSEMBLY SECURING H.P. AND L.P. HOSES TO FRONT CROSS MEMBER**	25—18	1	**R.H. DRIVE CARS ONLY**
12104/06	**Screw,** securing Clip		1	
422514/05	**Nut,** on Screw		1	
432783	**HOSE CLIP ASSEMBLY SECURING H.P. AND L.P. HOSES TO FRONT CROSS MEMBER**	25—19	1	**R.H. DRIVE CARS ONLY**
432706	**HOSE CLIP ASSEMBLY SECURING H.P. AND L.P. HOSES TO FRONT CROSS MEMBER**		1	**L.H. DRIVE CARS ONLY**
11104/09	**Bolt,** securing Clip to Hose		1	
432709	**Screw,** on Bolt		1	
422514/05	**Nut,** on Bolt		1	
12104/06	**Screw,** securing Clip to Cross Member		1	
422514/05	**Nut,** on Screw		1	

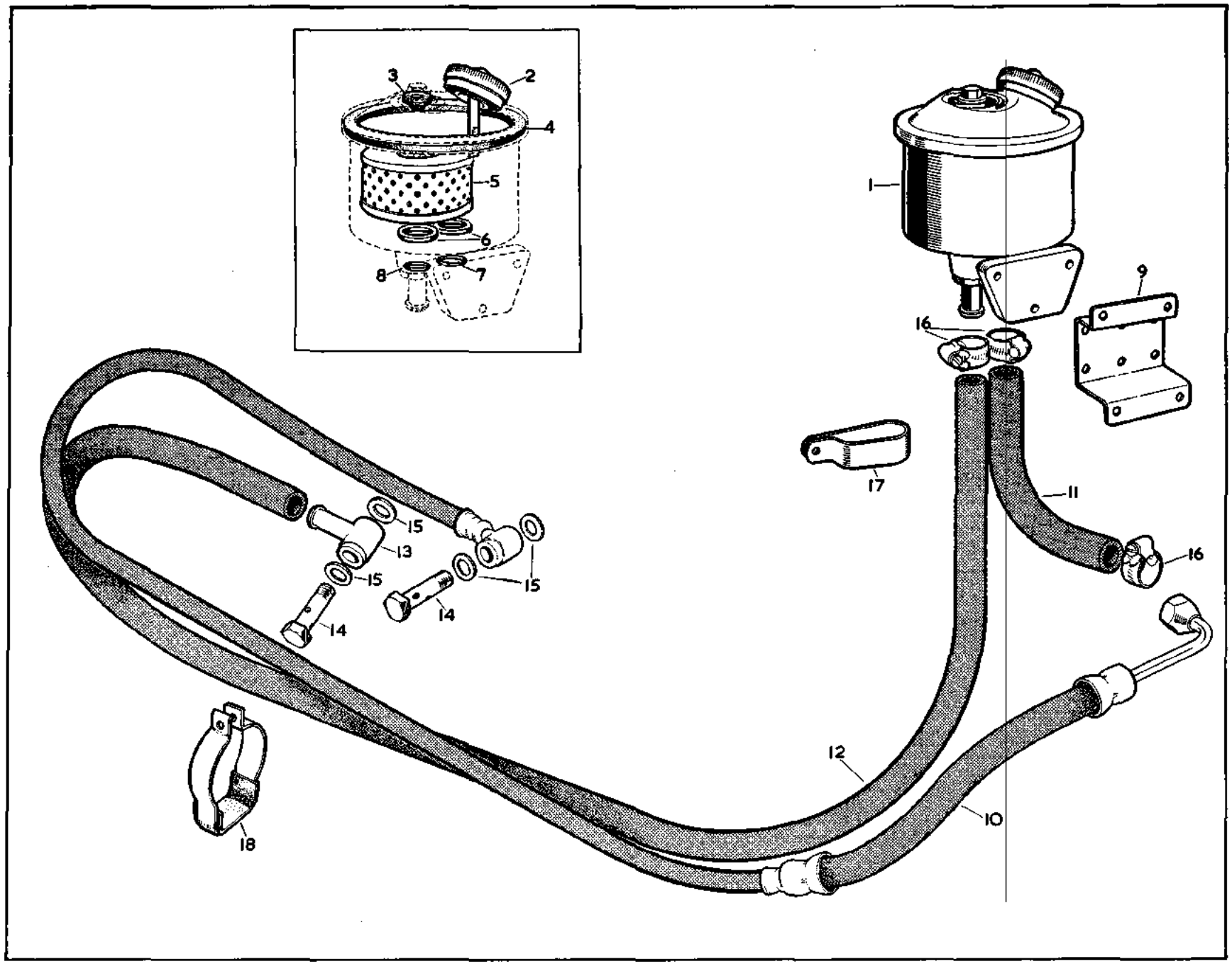

PLATE 25

OIL PUMP ASSEMBLY (HYDROSTEER)

Part No.	Description	Plate No.	No. per Unit	Remarks
308771	**OIL PUMP ASSEMBLY (HE.4662)**		1	
9983	**Body Assembly** (HE.3145)	26—1	1	
7544	**Dowel**, in Body (HE.1182)	26—2	2	
7545	**Rubber Gasket**, around Venturi in Body (HE.1322)	26—3	1	
9984	**Adaptor**, at top of Body (HE.2535)	26—4	1	
7546	**Screw and Lockwasher**, securing Adaptor to Body (HE.1769)	26—5	2	
7547	**'O' Ring** (Small) in Body (HE.2227)	26—6	1	
7548	**'O' Ring** (Large) in Body (HE.1922)	26—7	1	
7549	**Rotor Assembly** (HE.1196)	26—8	1	
9981	**Shaft**, operating Rotor (HE.1171)	26—9	1	
9733	**Ball Bearing**, for Shaft (HE.1417)	16—10	1	
7551	**Drive Pin**, between Shaft and Inner Rotor (HE.1193)	26—11	1	
9982	**Circlip**, retaining Bearing (HE.1418)	26—12	1	
7554	**Cover Assembly** (HE.1164)	26—13	1	
9387	**Flow Control Valve Assembly** (HE.1166)	26—14	1	
7556	**Return Spring**, for Flow Control Valve (HE.1173)	26—15	1	
7557	**'O' Ring**, on Flow Control Adaptor (HE.1179)	26—16	1	
9388	**Adaptor**, for Flow Control Valve (HE.2474)	26—17	1	
7558	**Bolt and Lockwasher**, securing Body to Cover (HE.1195)	26—18	5	
9983	**BODY ASSEMBLY FOR OIL PUMP (HE.3145)**	26—1	1	
7560	**Oil Seal**, in Body, for Drive Shaft (HE.3545)	26—19	1	
7950	**REPAIR KIT FOR OIL PUMP (HE.3922/1)**		1	
	Comprising :—			
7545	Rubber Gasket		1	
7547	'O' Ring		1	
7548	'O' Ring		1	
7557	'O' Ring		1	
7560	Oil Seal		1	
136469	**SUPPORT BRACKET FOR OIL PUMP (P.13646)**	26—20	1	
22106/09	**Screw**, Set, securing Bracket to Engine		4	
21106/32	**Bolt**, securing Bracket to Engine		1	
430241/06	**Washer**, Spring, on Screws and Bolt		5	

OIL PUMP ASSEMBLY (HYDROSTEER)

Part No.	Description	Plate No.	No. per Unit	Remarks
308773	**SUPPORT PLATE ON SUPPORT BRACKET FOR OIL PUMP**	26—21	1	
22105/06	**Screw**, Set, securing Plate to Bracket		2	
430241/05	**Washer**, Spring, on Setscrews		2	
22106/07	**Screw**, Set, securing Oil Pump to Support Plate		3	
411873	**Washer**, Serrated, on Setscrews		2	
430241/06	**Washer**, Spring, on Setscrews		3	
308742	**PULLEY FOR OIL PUMP (P.308742)**	26—22	1	
427627	**Key**, on Shaft	26—23	1	
21105/08	**Bolt**, securing Pulley to Shaft		1	
432429	**Washer**, Plain, on Bolt		1	
430241/05	**Washer**, Spring, on Bolt		1	
308803	**BELT, FOR OIL PUMP PULLEY (S.510)**	26—24	1	

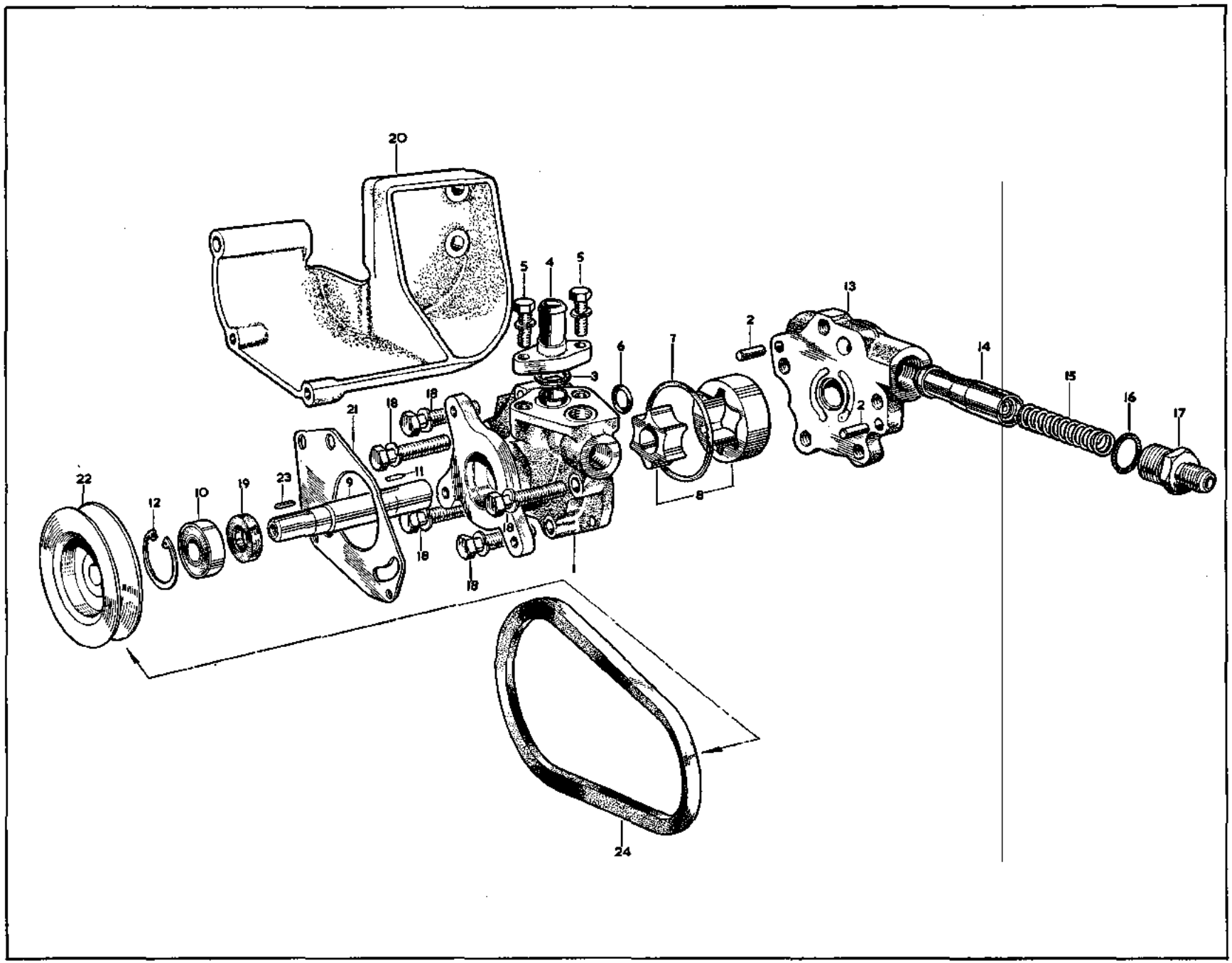

PLATE 26

ACCELERATOR CONTROLS

Part No.	Description	Plate No.	No. per Unit	Remarks
432845	**ACCELERATOR PEDAL AND BUSH ASSEMBLY**	8—1	1	
260340	**Spindle,** securing Pedal in Bracket	8—2	1	
285661	**Bracket,** mounting Pedal to Floor	8—3	1	**R.H. DRIVE CARS ONLY**
308961	**Bracket,** mounting Pedal to Floor		1	**L.H. DRIVE CARS ONLY**
422524/14	**Pin,** retaining Spindle	8—4	1	
423197/15	**Screw,** Set, securing Bracket to Floor		3	
420964/10	**PUSH ROD, BETWEEN PEDAL AND LEVER ON THROTTLE CONTROL TUBE ASSEMBLY**	8—5	1	
420963/3	**Ball Socket,** for Push Rod	8—6	2	
420965	**Pin,** (¼") securing Ball Socket	8—7	1	
424813	**Pin,** (10 A.N.F.), securing Ball Socket	8—8	1	
13104	**Nut,** securing Ball Sockets		2	
422543/2	**Nut,** locking Ball Socket		1	
430241/03	**Washer,** Spring, under Nut		1	
430241/04	**Washer,** Spring, under Nut		1	
426346	**DRAUGHT EXCLUDER FOR ACCELERATOR PEDAL**	8—9	1	
278800	**Ferrule,** in Draught Excluder	8—10	1	
308511	**THROTTLE CONTROL TUBE AND BUSH ASSEMBLY**		1	**R.H. DRIVE CARS ONLY** Fitted from Chassis No. 136711 to 137082 DQ.450
0507/10	**Bush,** in Control Tube		1	
309092	**THROTTLE CONTROL TUBE AND BUSH ASSEMBLY**	8—11	1	**R.H. DRIVE CARS ONLY** Fitted to Chassis No. 137083 and subs. DQ.450 And to all DR.450
06/DU/08	**Bush,** in Control Tube		2	
309178	**THROTTLE CONTROL TUBE AND BUSH ASSEMBLY**		1	**L.H. DRIVE CARS ONLY**
06/DU/08	**Bush,** in Control Tube		2	
423292/8	**SUPPORT TUBE SHAFT**		1	**R.H. DRIVE CARS ONLY** Fitted from Chassis No. 136711 to 137082 DQ.450

ACCELERATOR CONTROLS

Part No.	Description	Plate No.	No. per Unit	Remarks
432842	**SUPPORT TUBE SHAFT**	8—12	1	**R.H. DRIVE CARS ONLY** Fitted to Chassis No. 137083 and subs. DQ.450 And to all DR.450
432948	**SUPPORT TUBE SHAFT**		1	**L.H. DRIVE CARS ONLY**
400542	**Spring**, on Shaft	8—13	1	
422500/02	**Washer**, Plain, retaining Spring		1	
13104	**Nut**, securing Shaft		2	
430241/04	**Washer**, Spring, under Nuts		2	
430070	**R.H. BRACKET FOR THROTTLE CONTROL SHAFT**	8—14	1	**R.H. DRIVE CARS ONLY**
432149	**L.H. BRACKET ASSEMBLY FOR THROTTLE CONTROL SHAFT**	8—15	1	
430070	**L.H. BRACKET FOR THROTTLE CONTROL SHAFT**		1	**L.H. DRIVE CARS ONLY**
432946	**R.H. BRACKET ASSEMBLY FOR THROTTLE CONTROL SHAFT**		1	
405315	**Clip**, securing Hand Throttle Control Cable to Bracket	8—16	1	
426933/35	**Screw**, Set, securing Clip to Bracket		1	
426935/4	**Nut**, on Screw		1	
430241/03	**Washer**, Spring, under Nut		1	
12105/05	**Screw**, Set, securing Brackets to Bulkhead		2	
430241/05	**Washer**, Spring, on Setscrews		2	
432007	**HAND THROTTLE LEVER ASSEMBLY**	8—17	1	
423303	**Pin**, for Lever Fulcrum	8—18	1	
422500/02	**Washer**, Plain, on Pin		2	
423291	**Spring**, returning Lever	8—19	1	
13104	**Nut**, securing Lever		1	
430241/04	**Washer**, Spring, under Nut		1	
263226	**RETURN SPRING FOR THROTTLE CONTROL SHAFT**	8—20	1	

ACCELERATOR CONTROLS

Part No.	Description	Plate No.	No. per Unit	Remarks
432095	**THROTTLE CONTROL ROD, FROM CONTROL SHAFT TO THROTTLE AND MIXTURE CONTROL BRACKET ASSEMBLY**	8—21	1	
278271	**Bush,** Rubber, on Control Rod	8—22	1	
278679	**Sleeve,** in Bush	8—23	1	
423311	**Distance Piece,** on Bolt	8—24	1	
422500/02	**Washer,** Plain, retaining Bush	8—25	2	
422544/13	**Bolt,** securing Control Rod and Bush to Control Shaft Assembly		1	
422543/2	**Nut,** on Bolt		2	
420963/3	**Ball Socket,** on Control Rod	8—26	1	
13104	**Nut,** securing Ball Socket		1	
308686	**THROTTLE AND MIXTURE CONTROL BRACKET ASSEMBLY**	8—27	1	
21105/08	**Bolt,** securing Bracket to Induction Manifold		2	
430241/05	**Washer,** Spring, on Bolts		2	
431097	**THROTTLE CONTROL ROD FROM THROTTLE AND MIXTURE BRACKET ASSEMBLY TO CARBURETTERS**	8—28	2	
424822/3	**Ball Socket,** on Control Rods	8—29	4	
422543/2	**Nut,** securing Ball Sockets		4	
431998	**MIXTURE CONTROL ROD FROM THROTTLE AND MIXTURE BRACKET TO CARBURETTERS**	8—30	2	
424822/3	**Ball Socket,** on Control Rod	8—31	2	
422543/2	**Nut,** securing Ball Socket		2	
427461	**Washer,** Plain, on Control Rod	8—32	2	
422501/02	**Split Pin,** retaining Control Rod	8—33	2	
422542/22	**CONTROL ROD, FROM CARBURETTER TO INTERMEDIATE KICK-DOWN LEVER**	8—34	2	
420963/3	**Ball Socket,** on Control Rod	8—35	2	
13104	**Nut,** securing Ball Sockets		2	

ACCELERATOR CONTROLS

Part No.	Description	Plate No.	No. per Unit	Remarks
432087	**INTERMEDIATE KICK-DOWN LEVER AND BUSH ASSEMBLY**	8—36	1	
0608/10	**Bush**, in Lever		1	
424813	**Ball Pin**, securing Control Rods to Kick-down Lever	8—37	2	
422543/2	**Nut**, securing Ball Pins		2	
430241/03	**Washer**, Spring, under Nuts		2	
431801	**Bolt**, securing Lever to Bracket		1	
422500/01	**Washer**, Plain, on Bolt		1	
422514/05	**Nut**, on Bolt		1	
308491	**BRACKET FOR INTERMEDIATE KICK-DOWN LEVER**	8—38	1	
22105/05	**Screw**, Set, securing Bracket to Tappet Blocks		1	
430241/05	**Washer**, Spring, on Setscrews		1	
422542/17	**CONTROL ROD, INTERMEDIATE KICK-DOWN LEVER TO VERTICAL SHAFT ASSEMBLY**	8—39	1	
420963/3	**Ball Socket**, on Control Rod	8—40	2	
13104	**Nut**, securing Ball Sockets		2	
432791	**Safety Clip**, on Ball Sockets		2	Fitted from Engine No. 90003 to 93066 only
308958	**VERTICAL SHAFT ASSEMBLY COMPLETE WITH FIXING BRACKET**	8—41	1	
22105/06	**Screw**, Set, securing Bracket to Flywheel Housing		1	
430241/05	**Washer**, Spring, on Setscrews		1	
422542/47	**CONTROL ROD, FROM VERTICAL SHAFT ASSEMBLY TO GOVERNOR CONTROL LEVER ON GEARBOX**	8—42	1	
420963/3	**Ball Socket**, on Control Rod	8—43	2	
13104	**Nut**, securing Ball Sockets		2	
424813	**Ball Pin**, securing Control Rod to Gearbox Lever	8—44	1	
422543/2	**Nut**, securing Ball Pin to Control Rod		1	
430241/03	**Washer**, Spring, under Nut		1	

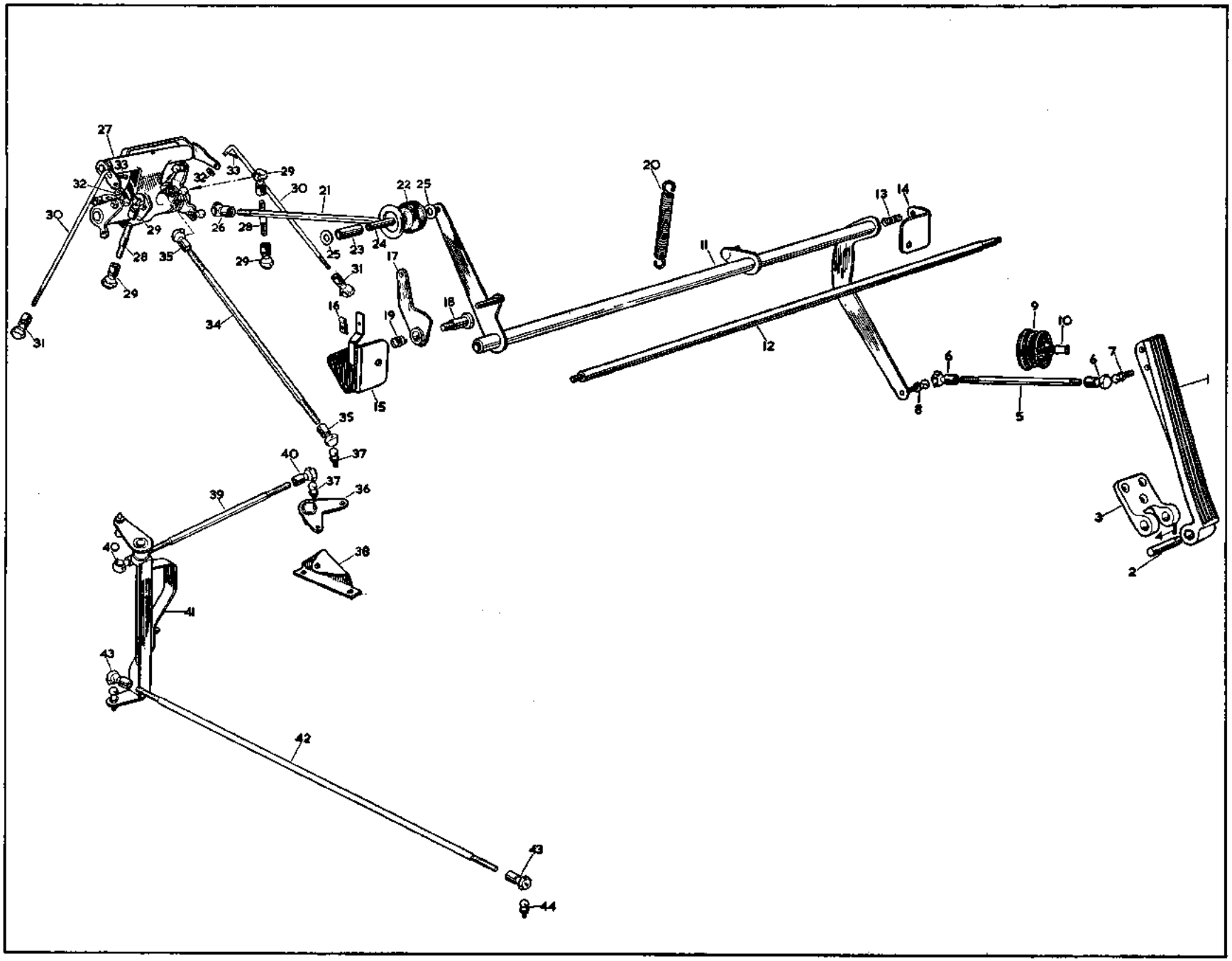
27
33
32
32
33
29
30
21
22
25
20
13
14
30
29
26
28
23
24
11
28
35
29
25
31
17
29
16
19
18
9
10
31
34
12
6
6
7
15
8
5
1
35
37
40
37
36
39
3
4
40
38
2
41
43
42
43
44

PLATE 8

GEAR SELECTOR CONTROL

Part No.	Description	Plate No.	No. per Unit	Remarks
307197	**SELECTOR QUADRANT ASSEMBLY**	27—1	1	
0810/12	**Bush,** for Quadrant		1	
427023	**Screw,** securing Cap to Quadrant		2	
423145	**Washer,** Shakeproof, on Screws		2	
307189	**COVER, FOR SELECTOR QUADRANT**	27—2	1	
430193	**Screw,** Long, securing Cover to Quadrant		1	
428570	**Screw,** Short, securing Cover to Quadrant		2	
423145	**Washer,** Shakeproof, on Screws		3	
307192	**SELECTOR HAND LEVER**	27—3	1	
430195	**Knob,** on Selector Hand Lever	27—4	1	
430199	**Nut,** on Selector Hand Lever	27—5	1	
430194	**Pivot Pin,** in Selector Hand Lever	27—6	1	
422543/2	**Nut,** securing Pivot Pin		1	
422508/09	**Washer,** under Nut		1	
430200	**Spring,** tensioning Selector Hand Lever	27—7	1	
430242	**Stop,** for Selector Hand Lever	27—8	1	
430243	**Packing** (Fibre) for Stop	27—9	1	
906049	**Screw,** Set, securing Stop		2	
136576	**SELECTOR CONTROL TUBE ASSEMBLY**	27—10	1	**R.H. DRIVE CARS ONLY**
309005	**SELECTOR CONTROL TUBE ASSEMBLY**		1	**L.H. DRIVE CARS ONLY**
430337	**Washer,** under Hand Lever Boss	27—11	1	
308593	**DRAUGHT EXCLUDER FOR STEERING COLUMN**	27—12	1	
278726	**Ferrule,** for Draught Excluder	27—13	1	

GEAR SELECTOR CONTROL

Part No.	Description	Plate No.	No. per Unit	Remarks
426264	**SUPPORT CLAMP AND CAP ASSEMBLY ON STEERING COLUMN**	27—14	1	
11104/09	**Bolt**, securing Cap to Clamp		2	
430241/04	**Washer**, Spring, on Bolts		2	
307205	**BOTTOM BRACKET ASSEMBLY ON STEERING COLUMN**	27—15	1	
0810/12	**Bush**, for Bracket		1	
21104/14	**Bolt**, securing Cap to Bracket		2	
430241/04	**Washer**, Spring, on Bolts		2	
430711	**Washer**, on Control Tube, under Bottom Bracket	27—16	1	
430712	**Spring**, on Washer	27—17	1	
C.11820/6	**Palnut**, ½" U.N.F. on Control Tube	27—18	2	
428608	**LEVER AT BOTTOM OF CONTROL TUBE**	27—19	1	**R.H. DRIVE CARS ONLY**
432119	**LEVER AT BOTTOM OF CONTROL TUBE**		1	**L.H. DRIVE CARS ONLY**
422510/12	**Key**, locating Lever on Control Tube	27—20	1	
11104/08	**Bolt**, securing Lever to Control Tube		1	
430196	**CONTACT ADJUSTER**	27—21	1	
422543/1	**Nut**, securing Contact Adjuster	27—22	1	
308374	**SWITCH FOR REVERSE LIGHT, IN BOTTOM BRACKET (31824-SS.10-1)**	27—23	1	
308374	**SWITCH, FOR SOLENOID CIRCUIT BREAKER, IN BOTTOM BRACKET (31824-SS.10-1)**	27—24	1	

GEAR SELECTOR CONTROL

Part No.	Description	Plate No.	No. per Unit	Remarks
423025	**BELL CRANK LEVER ASSEMBLY ON DASH**	27—25	1	**R.H. DRIVE CARS ONLY**
432449	**BELL CRANK LEVER ASSEMBLY ON DASH**		1	**L.H. DRIVE CARS ONLY**
0709/20	**Bush,** in Lever		1	
417291	**SUPPORT AND PIN ASSEMBLY FOR BELL CRANK LEVER ON DASH**	27—26	1	
428549	**Distance Piece,** between Support and Dash	27—27	1	
12104/06	**Screw,** Set, securing Support to Dash		3	
430241/04	**Washer,** Spring, on Setscrews		3	
427939	**Spring,** retaining Bell Crank Lever	27—28	1	
427940	**Cup Washer,** positioning Spring on Support Pin	27—29	1	
430249	**Collar,** retaining Cup Washer	27—30	1	
422501/15	**Split Pin,** securing Collar		1	
422542/50	**CONTROL ROD (HORIZONTAL) FROM CONTROL LEVER TO BELL CRANK LEVER ON DASH**	27—31	1	**R.H. DRIVE CARS ONLY**
422542/18	**CONTROL ROD (HORIZONTAL) FROM CONTROL LEVER TO BELL CRANK LEVER ON DASH**		1	**L.H. DRIVE CARS ONLY**
428392	**Ball Joint Assembly,** on Control Rod	27—32	2	
13104	**Nut,** securing Ball Joints	27—33	4	
430241/04	**Washer,** Spring, under Nuts		2	
432020	**BELL CRANK LEVER ASSEMBLY ON FRAME**	27—34	1	
0709/20	**Bush,** in Lever		1	
417291	**SUPPORT AND PIN ASSEMBLY FOR BELL CRANK LEVER ON FRAME**	27—35	1	
12104/05	**Screw,** Set, securing Support to Frame Bracket		3	
13104	**Nut,** on Setscrews		3	
430241/04	**Washer,** Spring, under Nuts		3	
427939	**Spring,** retaining Bell Crank Lever	27—36	1	
427940	**Cup Washer,** retaining Spring on Support Pin	27—37	1	
430249	**Collar,** retaining Cup Washer	27—38	1	
422501/15	**Split Pin,** securing Collar		1	

GEAR SELECTOR CONTROL

Part No.	Description	Plate No.	No per Unit	Remarks
422542/43	**CONTROL ROD (VERTICAL) FROM BELL CRANK LEVERS (DASH TO FRAME)**	27—39	1	
428392	**Ball Joint Assembly,** on Control Rod	27—40	2	
13104	**Nut,** securing Ball Joints	27—41	4	
430241/04	**Washer,** Spring, under Nuts		2	
422542/28	**CONTROL ROD FROM BELL CRANK LEVER ON FRAME TO SELECTOR LEVER ON GEARBOX**	27—42	1	
430178	**Bush** for Ball Pin in Selector Lever	27—43	1	
428392	**Ball Joint Assembly** on Control Rod	27—44	2	
13104	**Nut,** securing Ball Joints	27—45	4	
430241/04	**Washer,** Spring, under Nuts		2	

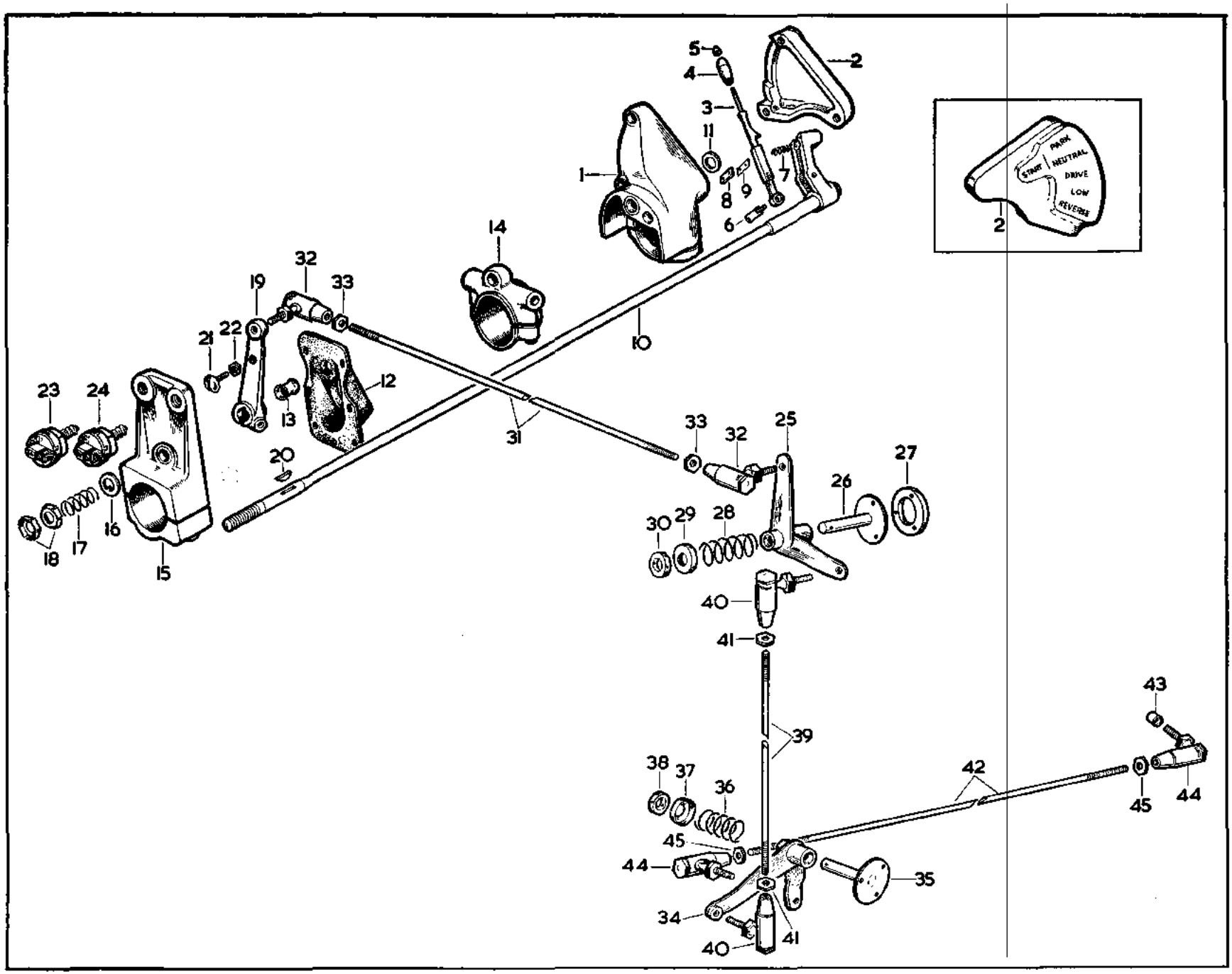

PLATE 27

Part No.	Description	Plate No.	No. per Unit	Remarks
136360	**RADIATOR BLOCK ASSEMBLY**		1	Fitted from Chassis No. 136711 to 137011 DQ.450 And to all DQ.451
308272	**Filler Cap** (1571515)		1	
136543	**RADIATOR BLOCK ASSEMBLY**	28—1	1	Fitted to Chassis No. 137012 and subs. DQ.450 And to all DR.450/1
308272	**Filler Cap** (1571515)	28—2	1	
26200	**RADIATOR CRADLE ASSEMBLY**		1	Fitted from Chassis No. 136711 to 137011 DQ.450 And to all DQ.451
135966	**Fixing Bracket**, R.H. Side, for Radiator Surround		1	
135967	**Fixing Bracket**, L.H. Side, for Radiator Surround		1	
13104	**Nut**, securing Fixing Brackets to Cradle		6	
430241/04	**Washer**, Spring, under Nuts		6	
26267	**RADIATOR CRADLE ASSEMBLY**	28—3	1	Fitted to Chassis No. 137012 and subs. DQ.450 And to all DR.450/1
	Individual Items as for Cradle Assembly 26200.			
11104/05	**Bolt**, securing Radiator Surround to Brackets on Cradle		6	
422500/03	**Washer**, Plain, on Bolts		6	
430241/04	**Washer**, Spring, on Bolts		6	
26240	**FAN COWL**		1	Fitted from Chassis No. 136711 to 137011 DQ.450 And to all DQ.451
12104/04	**Bolt**, securing Radiator Block, and Fan Cowl to Cradle		8	
422500/03	**Washer**, Plain, on Bolts		8	
430241/04	**Washer**, Spring, on Bolts		8	
26264	**FAN COWL**	28—4	1	Fitted to Chassis No. 137012 and subs. DQ.450 And to all DR.450/1
12104/04	**Bolt**, securing Radiator Block and Fan Cowl to Cradle		10	
422500/03	**Washer**, Plain, on Bolts		10	
430241/04	**Washer**, Spring, on Bolts		10	
422505/11	**DRAIN TAP FOR RADIATOR**	28—5	1	
424830	**Extension**, for Drain Tap		1	Fitted from Chassis No. 136711 to 137011 DQ.450 And to all DQ.451
432830	**Extension**, for Drain Tap	28—6	1	Fitted to Chassis No. 137012 and subs. DQ.450 And to all DR.450/1
424775	**Washer**, on Drain Tap Extension	28—7	2	

COOLING SYSTEM

Part No.	Description	Plate No.	No. per Unit	Remarks
308937	**HOSE, TOP WATER CONNECTION**	28—8	1	
C.2905/5	**Clip,** securing Hose to Thermostat Outlet Pipe and Radiator	28—9	2	
308804	**HOSE, BOTTOM WATER CONNECTION**		1	Fitted from Chassis No. 136711 to 137011 DQ.450 And to all DQ.451
308938	**HOSE, BOTTOM WATER CONNECTION**	28—10	1	Fitted to Chassis No. 137012 and subs. DQ.450 And to all DR.450/1
309014	**Reinforcement,** (Brass Wire) inside Bottom Hose	28—11	1	
C.2905/5	**Clip,** securing Hose to Radiator and Water Pump	28—12	1	
401578	**RUBBER MOUNTING, RADIATOR, TOP**	28—13	2	
402194	**RUBBER MOUNTING, RADIATOR, BOTTOM**	28—14	2	
11106/16	**Bolt,** securing Radiator to Frame Bracket		2	
422514/07	**Nut,** Nyloc, on Bolts		2	
422500/05	**Washer,** Plain under Nuts		2	

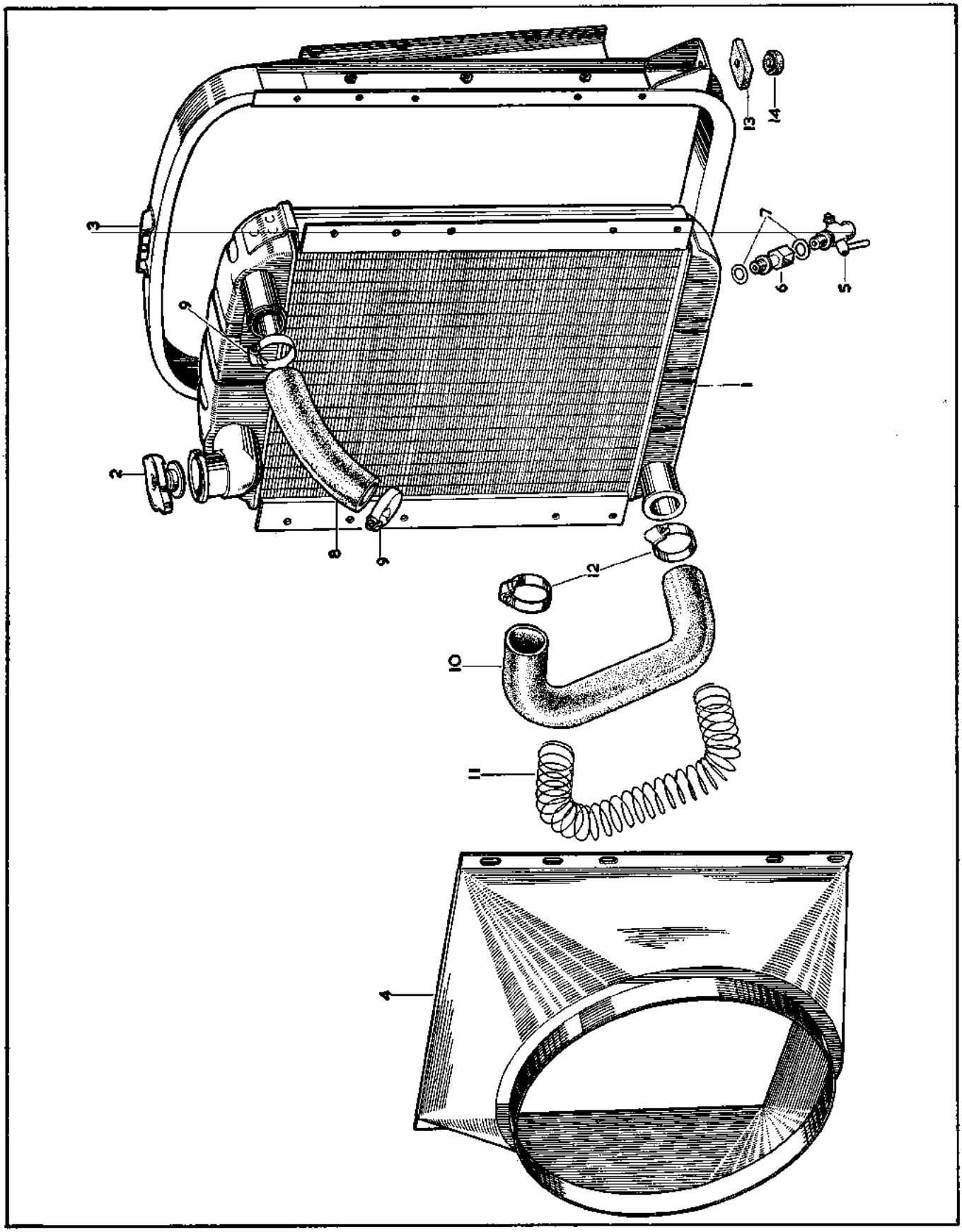

PLATE 28

EXHAUST SYSTEM

Part No.	Description	Plate No.	No. per Unit	Remarks
136554	**EXHAUST DOWN PIPE ASSEMBLY**	29—1	1	
C.1760	**Flexible Pipe,** on Exhaust Down Pipe (12" long)	29—1A	2	
132001	**Gasket,** between Down Pipe and Exhaust Manifolds	29—2	2	
11105/09	**Bolt,** securing Down Pipe to Exhaust Manifolds		8	
122512/06	**Nut,** on Bolts		8	
308704	**INTERMEDIATE L.H. EXHAUST PIPE ASSEMBLY**	29—3	1	
426926	**Gasket,** between Intermediate L.H. Pipe and Down Pipe	29—4	1	
11105/09	**Bolt,** securing Intermediate L.H. Pipe to Down Pipe		3	
422512/06	**Nut,** on Bolts		3	
136373	**EXHAUST SILENCER AND TAIL PIPE ASSEMBLY, R.H.**		1	Fitted from Chassis No. 136711 to 137011 DQ.450 And to all DQ.451
136374	**EXHAUST SILENCER AND TAIL PIPE ASSEMBLY, L.H.**		1	
136621	**EXHAUST SILENCER AND TAIL PIPE ASSEMBLY, R.H.**	29—5	1	Fitted to Chassis No. 137012 and subs. DQ.450
136622	**EXHAUST SILENCER AND TAIL PIPE ASSEMBLY, L.H.**	29—6	1	
136619	**EXHAUST SILENCER AND TAIL PIPE ASSEMBLY, R.H.**		1	**DR.450/1 ONLY**
136620	**EXHAUST SILENCER AND TAIL PIPE, ASSEMBLY, L.H.**		1	
426926	**Gasket,** between R.H. Silencer Inlet and Exhaust Down Pipe	29—7	1	
426926	**Gasket,** between L.H. Silencer Inlet and Intermediate Pipe	29—7	1	
11105/09	**Bolt,** at connection of Pipes		6	
422512/06	**Nut,** on Bolts		6	

EXHAUST SYSTEM

Part No.	Description	Plate No.	No. per Unit	Remarks
428381	**RUBBER MOUNTING FOR EXHAUST PIPES**	29—8	4	
422512/06	**Nut,** securing Rubber Mountings		4	
427795	**Bracket,** between Exhaust Pipes and Rubber Mountings	29—9	4	
12105/05	**Bolt,** securing Brackets to Rubber Mountings		4	
422512/06	**Nut,** on Bolts		4	
426943	**' U ' Bolt,** securing Exhaust Pipes to Brackets	29—10	4	
422512/05	**Nut,** on ' U ' Bolts		8	
433133	**STRAP (" BALATA " BELT) MOUNTING EXHAUST SILENCERS AT REAR**	29—11	2	
427336	**Bracket,** between Straps and Silencers	29—12	2	
12106/06	**Screw,** Set, securing Straps to Frame and Brackets		4	
422512/07	**Nut,** on Setscrews		4	
425089	**Retaining Washer,** under Nuts		4	
426943	**' U ' Bolt,** securing Silencers to Brackets	29—13	2	
422512/05	**Nut,** on ' U ' Bolts		4	
308561	**BRACKET, MOUNTING R.H. TAIL PIPE TO FRAME**	29—14	1	
308562	**BRACKET, MOUNTING L.H. TAIL PIPE TO FRAME**	29—15	1	
425188	**Rubber Bush,** at each side of Brackets	29—16	4	
423563	**Bolt,** securing Brackets to Frame		2	
425187	**Retaining Washer,** on Bolts, for Rubber Bushes	29—17	2	
425189	**Distance Tube,** through Rubber Bushes	29—18	2	
13306	**Nut,** on Bolts		2	
422501/07	**Split Pin,** retaining Nuts		2	
426943	**' U ' Bolt,** securing Tail Pipes toBrackets	29—19	2	
422512/05	**Nut,** on ' U ' Bolts		4	
136540	**EXHAUST MUFFLER**	29—20	2	
432645	**Clip,** securing Mufflers to Tail Pipes	29—21	2	
11105/14	**Bolt,** through Clips		2	
422512/06	**Nut,** on Bolts		2	

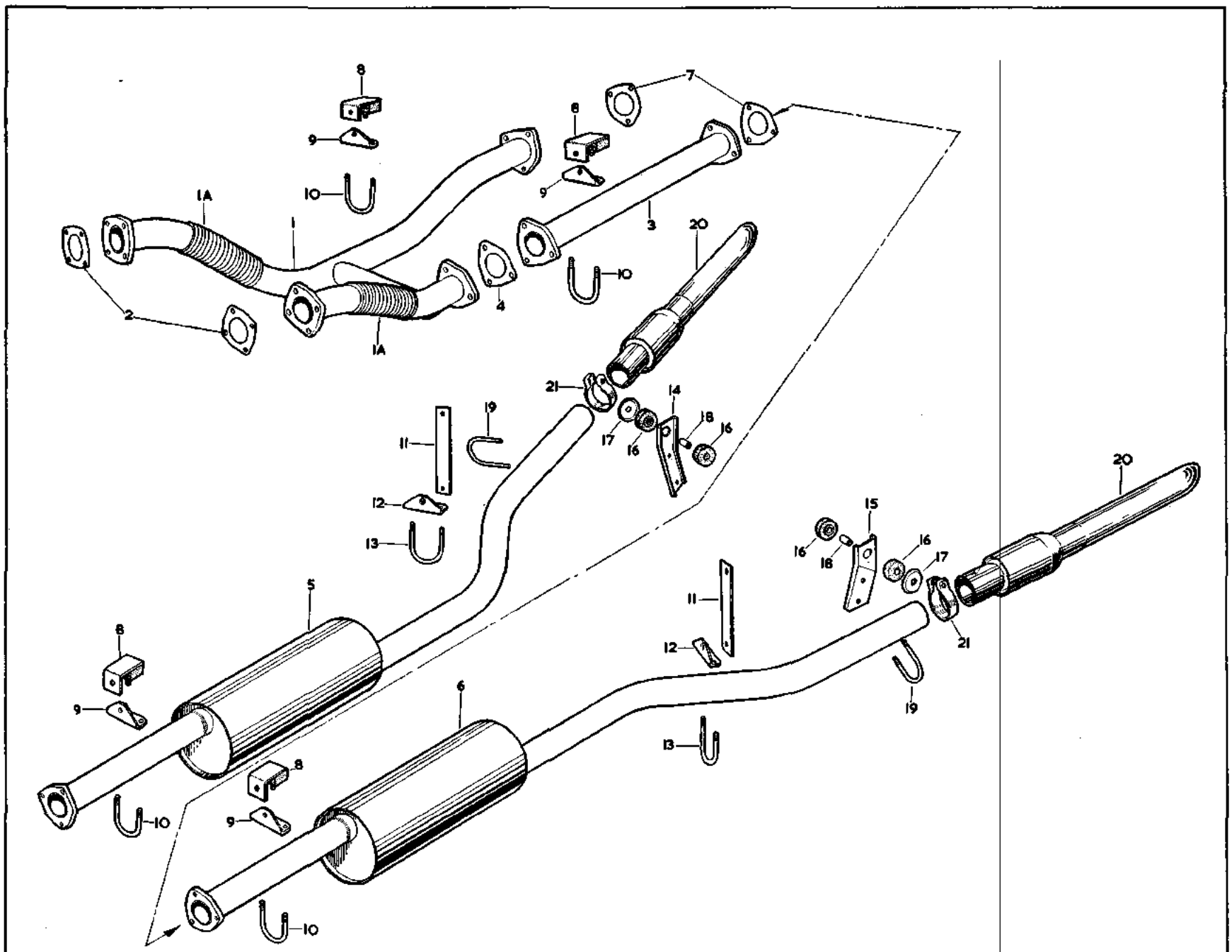

PLATE 29

FUEL SYSTEM

Part No.	Description	Plate No.	No. per Unit	Remarks
136542	**PETROL TANK**	30—1	1	
426867	**Drain Plug,** for Tank	30—2	1	
432530/04	**Gasket,** on Plug	30—3	1	
431399	**HOSE CONNECTING PETROL TANK TO FILLER**	30—4	1	
423176/32	**Clip,** securing Hose	30—5	2	
309016	**PETROL FILLER CAP ASSEMBLY**	30—6	1	
432988	**Valve Assembly,** in Filler Cap		1	
426084/26	**Screw,** securing Valve Assembly		1	
430241/03	**Washer,** Spring, on Screw		1	
307815	**Grommet,** for Petrol Filler Cap	30—7	1	
431137	**Grommet Ring,** for Petrol Filler Cap	30—8	1	
307877	**PIPE FOR AIR VENT**	30—9	1	
428361	**Hose,** for Air Vent	30—10	2	
423176/04	**Clip,** securing Hose	30—11	4	
431250	**Clip,** securing Air Vent Pipe	30—12	1	
12104/04	**Screw,** Set, securing Clip to Tank		1	
430241/04	**Washer,** Spring, on Setscrew		1	
308362	**PETROL GAUGE TANK UNIT (FT.5301/10)**	30—13	1	
C.937	**Sealing Washer,** (Cork) between Gauge Unit and Tank	30—14	1	
426934/22	**Screw,** securing Gauge Unit to Tank		6	
C.20882	**PETROL FEED UNIT (PETROL RESERVE VALVE) (78045)**	30—15	1	
431352	**Gasket,** between Unit and Tank	30—16	1	
426934/25	**Screw,** securing Unit to Tank		2	
431497	**Washer,** Sealing, on Screws		2	
432472	**Adaptor,** for Petrol Feed Unit	30—17	1	

Part No.	Description	Plate No.	No. per Unit	Remarks
308794	**PETROL PIPE ASSEMBLY, PETROL TANK TO PUMP**	30—18	1	
309102	**PETROL PUMP (AUA.161)**		1	Fitted from Chassis No. 136711 to 137222 DQ.450 136890 to 136904 DQ.451 136011 to 136176 DR.450/1
C.20575	**PETROL PUMP (AUB.161)**	30—19	1	Fitted to Chassis No. 137223 and subs. DQ.450 136905 and subs. DQ.451 136177 and subs. DR.450/1
422284	**Grommet**, for Petrol Pump Mounting	30—20	2	
431480	**Sleeve**, for Petrol Pump Mounting	30—21	2	
900155	**Bolt**, securing Petrol Pump		2	
431481	**Washer**, Special, on Bolts		4	
430241/05	**Washer**, Spring, on Bolts		2	
133438/69	**Bolt**, securing Banjo Union to Pump	30—22	2	
133438/70	**Washer**, on Bolts, each side of Banjo	30—23	4	
308793	**PETROL PIPE ASSEMBLY, FROM PETROL PUMP TO REAR INTERMEDIATE PIPE**	30—24	1	
308791	**PETROL PIPE ASSEMBLY, REAR INTERMEDIATE**	30—25	1	**DQ.450/1 ONLY**
309041	**PETROL PIPE ASSEMBLY, REAR INTERMEDIATE**		1	**DR.450/1 ONLY**
276302/6	**Clip**, securing Rear Intermediate Pipe to Frame	30—26	See Remarks	**7 off Fitted DQ.450/1.**
426933/34	**Screw**, Set, securing Clips			**8 off Fitted DR.450/1**
426935/4	**Nut**, on Setscrews			
430241/03	**Washer**, Spring, under Nuts			

FUEL SYSTEM

Part No.	Description	Plate No.	No. per Unit	Remarks
308790	**PETROL PIPE ASSEMBLY, FRONT INTERMEDIATE**	30—27	1	
136703	**PETROL PIPE ASSEMBLY FROM FRONT INTERMEDIATE PIPE TO FILTER**	30—28	1	
C.11575	**Olive,** on Pipe		1	
C.14685	**Nut,** securing Olive			
276302/6	**Clip,** securing Pipe to Valance	30—29	3	
426933/33	**Screw,** Set, securing Clips		3	
426935/4	**Nut,** on Setscrews		3	
430241/03	**Washer,** Spring under Nuts		3	
307988	**PETROL FILTER ASSEMBLY (7950290)**	30—30	1	
307988/10	**Cover** (7050289)	30—31	1	
307988/02	**Sealing Ring** (1524845)	30—32	1	
7298	**Gasket,** between Glass Bowl and Filter Body (5593321)	30—33	1	
7299	**Filter** (1524849)	30—34	1	
7300	**Glass Bowl** (1523620)	30—35	1	
7301	**Retainer Assembly,** securing Glass Bowl (5592050)	30—36	1	
432990	**Union,** Straight, on Filter (Inlet Side)	30—37	1	
12105/06	**Screw,** Set, securing Filter Assembly to Valance		2	
13105	**Nut,** on Setscrews		2	
430241/05	**Washer,** under Nuts		2	
C.20317/04	**PETROL PIPE ASSEMBLY FROM FILTER TO CARBURETTERS**	30—38	1	
431476	**Union,** on Pipe to Filter	30—39	1	
C.20295	**Olive,** on Pipe	30—40	2	
C.20294	**Nut,** Union, on Pipe	30—41	2	
C.20317/03	**PETROL PIPE ASSEMBLY BETWEEN CARBURETTERS**	30—42	1	
C.20295	**Olive,** on Pipe	30—43	2	
C.20294	**Nut,** Union, securing Pipe to Carburetters	30—44	2	

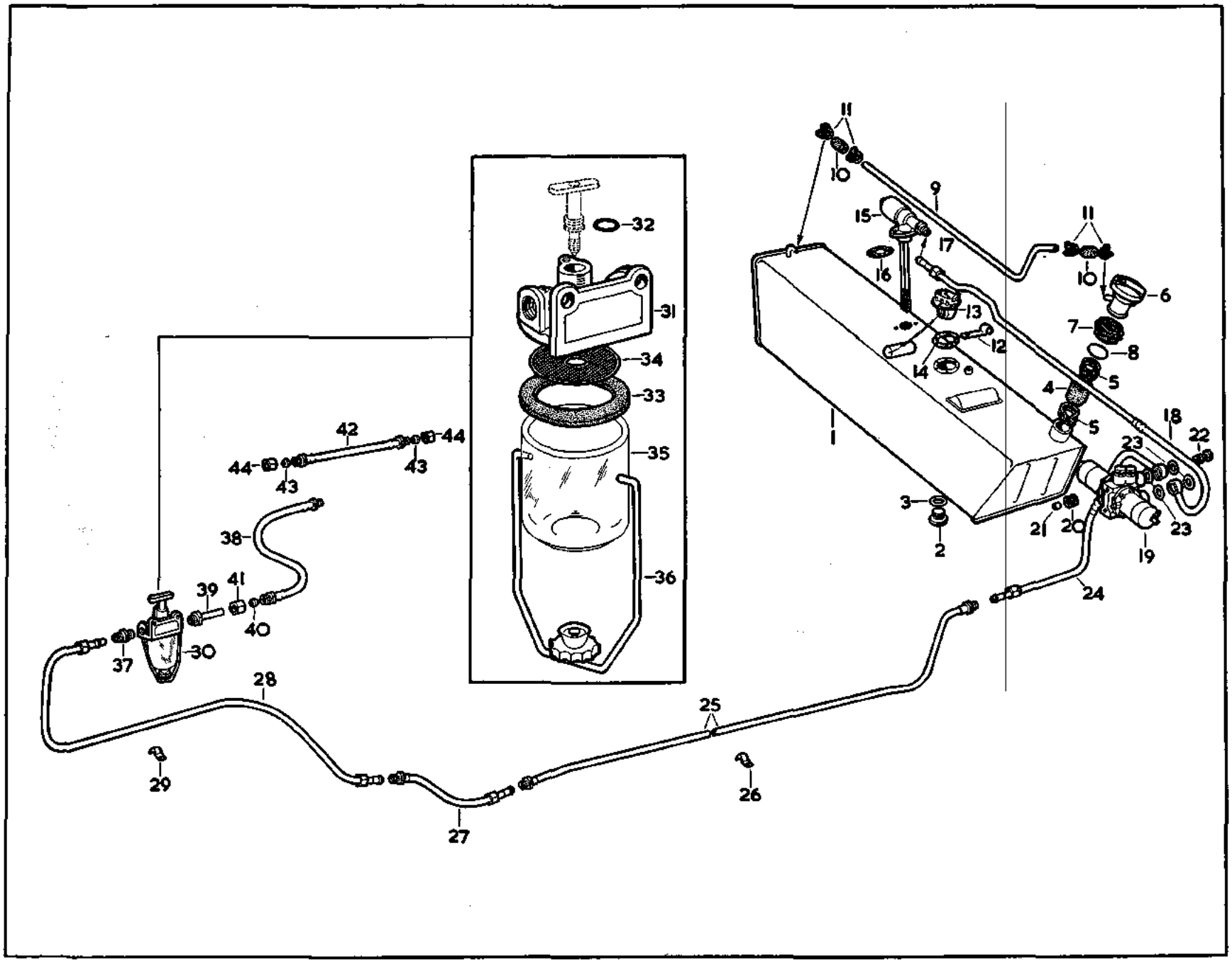
1
2
3
4
5
6
7
8
9
10
11
12
13
14
15
16
17
18
19
20
21
22
23
24
25
26
27
28
29
30
31
32
33
34
35
36
37
38
39
40
41
42
43
44

PLATE 30

CHASSIS

Part No.	Description	Plate No.	No per Unit	Remarks
26241	**CHASSIS FRAME ASSEMBLY**	31—1	1	Fitted from Chassis No. 136711 to 137010 DQ.450 And to all DQ.451
420902	**Stiffening Plate**, for Steering Box Bracket		2	
420901	**Tube**, for Steering Box Bracket		2	
422635	**Frame Stiffener**, for Front Bumper		2	
426608	**Jack Tube**		2	
432710	**Mounting Bracket**, for Horns		2	
432016	**Cross Tube**, Front		1	
422769	**Bracket**, supporting Radiator Cradle		2	
432299	**R.H. Abutment Bracket**, for Hydraulic Brake Pipe, Front		1	
432298	**L.H. Abutment Bracket**, for Hydraulic Brake Pipe, Front		1	
303881	**R.H. Bracket**, for Top Transverse Link		1	
303882	**L.H. Bracket**, for Top Transverse Link		1	
427857	**Support Bracket**, for Tee Piece		1	
308484	**R.H. Support Bracket**, for Engine		1	
308485	**L.H. Support Bracket**, for Engine		1	
308612	**R.H. Support Bracket**, for Gearbox		1	
308609	**L.H. Support Bracket**, for Gearbox		1	
306182	**Cross Tube**, Intermediate, between Jack Tube and No. 5 Body Mounting Bracket		1	
308934	**Bracket**, for Rear Shock Absorbers		2	
427359	**Abutment Bracket**, for Hydraulic Brake Pipe, Rear		1	
420962	**Cross Tube**, Rear		1	
427443	**Support**, for Exhaust Pipe Hanger, Front and Intermediate		3	
425404	**Support**, for Exhaust Pipe Hanger, Rear		2	
135355	**Bracket Assembly, No. 1, R.H.**, Body Mounting		1	
135352	**Bracket Assembly, No. 1, L.H.**, Body Mounting		1	
303902	**Bracket Assembly, Nos. 2 & 3**, Body Mounting (Outer)		4	
424868	**Bracket Assembly, No. 2**, Body Mounting (Inner)		2	
135982	**Bracket and Tube Assembly, No. 4, R.H.**		2	
135983	**Bracket and Jack Tube Assembly, No. 4, L.H.**		2	
303906	**Bracket Assembly, No. 5**, Body Mounting		2	
304251	**Bracket Assembly, No. 6**, Body Mounting		2	
425809	**Tapping Block** for No. 3 Body Mounting Bracket		4	

26271	**CHASSIS FRAME ASSEMBLY**		1	Fitted to Chassis No. 137011 and subs. DQ.450
432719	**Bracket**, supporting Radiator Cradle		2	
C.21148	**Bracket**, for Rear Shock Absorbers		2	
	All other items as for Chassis Frame Assembly 26241.			

26272	**CHASSIS FRAME ASSEMBLY**		1	DR.450/1 ONLY
432719	**Bracket**, supporting Radiator Cradle		2	
136587	**Cross Member**, Centre		1	
425809	**Tapping Block**, for Centre Cross Member		2	
309281	**Cross Tube**, Intermediate, forward of Jack Tube		1	
309040	**Bracket**, Body Mounting, Centre		2	
425809	**Tapping Block**, for Centre Body Mounting Bracket		4	
C.21148	**Bracket**, for Rear Shock Absorbers		2	
	All other items as for Chassis Frame Assembly 26241.			

Part No.	Description	Plate No.	No. per Unit	Remarks
303943	**BRACKET MOUNTING STEERING BOX**	31—2	1	
303944	**Cap**, for Bracket	31—3	1	
13312	**Nut**, securing Bracket to Frame		1	
422500/08	**Washer**, Plain, under Nut		1	
422501/33	**Split Pin**, securing Nut		1	
11107/41	**Bolt**, securing Cap to Bracket		2	
430241/07	**Washer**, Spring, on Bolts		2	
133908	**BOTTOM PLATE FOR FRONT CROSS MEMBER**	31—4	1	
12105/05	**Screw**, Set, securing Bottom Plate to Front Cross Member		8	
13105	**Nut**, on Setscrew		9	
430241/05	**Washer**, Spring, under Nuts		9	
308486	**BRACKET ASSEMBLY FOR FRONT ENGINE MOUNTING**	31—5	2	
22106/06	**Screw**, Set, securing Bracket to Engine		8	
430242/06	**Washer**, Spring, on Setscrews		8	
308998	**FRONT ENGINE MOUNTING (METALASTIK)**	31—6	2	
422514/07	**Nut**, securing Mounting to Bracket		4	
422500/03	**Washer**, Plain, under Nuts		2	
307209	**BRACKET BETWEEN GEAR SELECTOR BELL CRANK LEVER SUPPORT AND FRAME**	31—7	1	
12105/06	**Screw**, Set, securing Bracket to Frame		3	
13105	**Nut**, on Setscrews		3	
430241/05	**Washer**, Spring, under Nuts		3	
136555	**SUPPORT MEMBER FOR GEARBOX**	31—8	2	
11106/07	**Bolt**, securing Support Member to Cruciform		4	
422514/07	**Nut**, Nyloc, on Bolts		4	
422500/03	**Washer**, Plain, under Nuts		4	

CHASSIS

Part No.	Description	Plate No.	No. per Unit	Remarks
432769	**GEARBOX CONE RUBBER MOUNTING (METALASTIK)**	31—9	2	
430203	**Distance Piece,** for Mountings	31—10	2	
432256	**Bolt,** securing Mountings		2	
13308	**Nut,** on Bolts		2	
422501/16	**Split Pin,** securing Nuts		2	
11106/06	**Bolt,** securing Mounting to Support Member		4	
422514/07	**Nut,** Nyloc, on Bolts		4	
306181	**BUMPSTOP FOR REAR AXLE NOSE-PIECE**	31—11	1	
11104/06	**Bolt,** securing Buffer to Support Bracket		2	
13104	**Nut,** on Bolts		2	
430241/04	**Washer,** Spring, under Nuts		2	
309382	**BUMPSTOP ASSEMBLY FOR REAR AXLE ON INTERMEDIATE CROSS TUBE**		1	
423312	**BUMPSTOP FOR REAR AXLE**	31—12	2	Fitted from Chassis No. 136711 to 137278 DQ.450 And to all DQ.451 136011 to 136225 DR.450/1
13106	**Nut,** securing Bumpstop to Frame Side Members		2	
430241/06	**Washer,** Spring, under Nuts		2	
C.20279	**BUMPSTOP FOR REAR AXLE**		2	Fitted to Chassis No. 137279 and subs. DQ.450 136226 and subs. DR.450/1
C.21421	**Packing,** for Bumpstop		2	
13106	**Nut,** on Bolts		2	
430241/06	**Washer,** Spring, under Nuts		2	
400487	**BUMPSTOP FOR FRONT SUSPENSION**	31—13	2	
11105/10	**Bolt,** securing Buffers to Frame		4	
13105	**Nut,** on Bolts		4	
430241/05	**Washer,** Spring, under Nuts		4	
431458	**REBOUND STOP RUBBER ASSEMBLY**	31—14	2	
422514/07	**Nut,** securing Rebound Stop Rubber		2	
432496	**Washer,** Packing, under Nuts		2	

Part No.	Description	Plate No.	No. per Unit	Remarks
432720	**STEERING LOCKSTOP**	31—15	2	
12106/08	**Screw,** Set, securing Lockstop to front of Front Cross Member		2	
430241/06	**Washer,** Spring, on Setscrews		2	
430777	**REAR SPRING ASSEMBLY**	31—16	2	
430894	**Main Leaf,** complete with Bushes		2	
430532	**Bush,** in Spring Eye (Metalastik 13691)		4	
431544	**' U ' Bolt,** securing Rear Springs to Rear Axle	31—17	4	
422514/08	**Nut,** Nyloc, on Bolts		8	
431545	**Bottom Plate,** for Springs	31—18	2	
430785	**BRACKET SECURING REAR SPRING FRONT EYE TO FRAME**	31—19	2	
11108/30	**Bolt,** securing Spring to Bracket		2	
422514/09	**Nut,** Nyloc, on Bolts		2	
11106/09	**Bolt,** securing Brackets to Frame		8	
422514/07	**Nut,** Nyloc, on Bolts		8	
430907	**REAR SPRING SHACKLE AND BUSH ASSEMBLY**	31—20	2	
430537	**Bush,** in Shackle (Metalastic 13/797)		2	
11108/30	**EYE BOLT SECURING REAR SPRING TO FRAME AND SPRING SHACKLES**	31—21	4	
422514/09	**Nut,** Nyloc, on Eye Bolts		4	
309020	**FRONT SHOCK ABSORBER (TYPE NF.4 64054377)**	31—22	2	
8299	**Rubber Buffer,** at top of Shock Absorber (64539036)		4	
C.3273	**Rubber Bush,** at bottom of Shock Absorbers (9046/386)		4	
423133	**Bolt,** securing Shock Absorber to Transverse Link		2	
423137	**Bush,** on Bolts		2	
13310	**Nut,** Slotted, on Bolts		2	
422500/07	**Washer,** Plain, under Nuts		2	
422501/25	**Split Pin,** retaining Nuts		2	

Part No.	Description	Plate No.	No. per Unit	Remarks
305073	**BRACKET SECURING FRONT SHOCK ABSORBER TO FRAME**	31—23	2	
11106/08	**Bolt,** securing Front Shock Absorber Bracket		6	
430241/06	**Washer,** Spring, on Bolts		6	
309055	**REAR SHOCK ABSORBERS (64054381 TYPE NF.7)**	31—24	2	
8299	**Rubber Buffer,** at top of Shock Absorbers (64539036)		4	
C.3273	**Rubber Bush,** at bottom of Shock Absorbers (9046/386)		4	
432815	**Anchor Pin,** securing Shock Absorbers		2	
422514/08	**Nut,** Nyloc, on Anchor Pins		2	
422500/04	**Washer,** Plain, under Nuts		2	

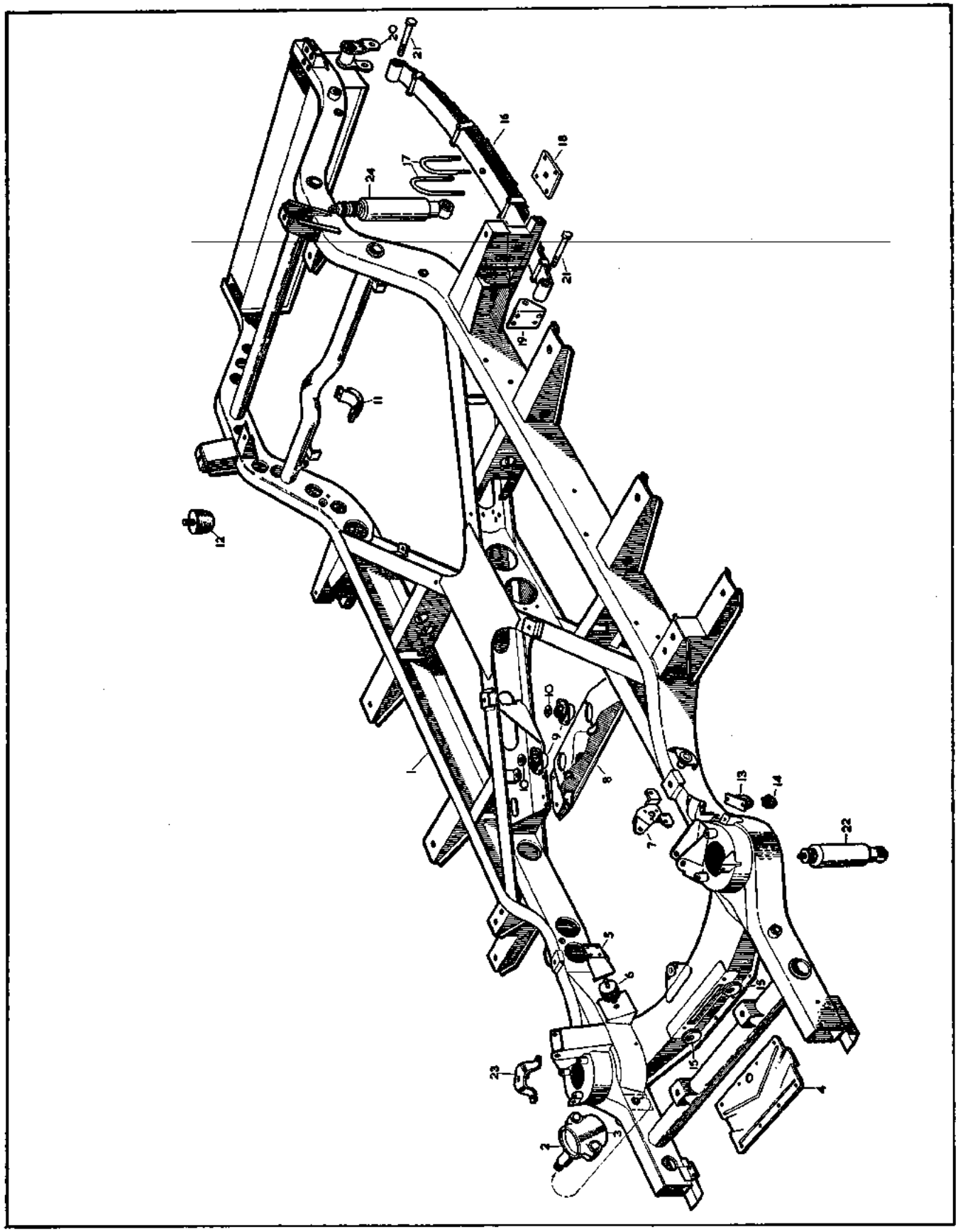

PLATE 31

BODY SHELL

Part No.	Description	Plate No.	No per Unit	Remarks
94/631013	**BODY SHELL COMPLETE ASSEMBLY**		1	**R.H. DRIVE CARS ONLY**
95/631013	**BODY SHELL COMPLETE ASSEMBLY**		1	**L.H. DRIVE CARS ONLY**
223/400	Roof Assembly		1	
223/302	Front Door Shell Assembly, R.H.		1	
223/301	Front Door Shell Assembly, L.H.		1	
223/352	Rear Door Shell Assembly, R.H.		1	
223/351	Rear Door Shell Assembly, L.H.		1	
223/124	Bulkhead Panel Assembly		1	
223/804	Windscreen Panel Assembly		1	
223/104	'A' Post Panel Assembly, R.H.		1	
223/103	'A' Post Panel Assembly, L.H.		1	
223/500	Main Floor Assembly		1	
223/542	Door Sill Assembly Complete, R.H.		1	
223/541	Door Sill Assembly Complete, L.H.		1	
223/118	'B.C.' Post Assembly, R.H.		1	
223/117	'B.C.' Post Assembly, L.H.		1	
223/202	'D' Post Upper Assembly, R.H.		1	
223/201	'D' Post Upper Assembly. L.H.		1	
223/114	'D' Post Lower Assembly, R.H.		1	
223/113	'D' Post Lower Assembly, L.H.		1	
243/122	Rear Quarter Assembly, R.H.		1	
243/121	Rear Quarter Assembly, L.H.		1	
243/504	Luggage Floor Assembly		1	
223/110	Wheel Arch Assembly, R.H.		1	
223/109	Wheel Arch Assembly, L.H.		1	
241/586	Cover Plate Front Floor		1	

BODY SHELL

Part No.	Description	Plate No.	No. per Unit	Remarks
53189	**BODY SHELL COMPLETE ASSEMBLY**		1	**R.H. DRIVE CARS ONLY**
53190	**BODY SHELL COMPLETE ASSEMBLY**		1	**L.H. DRIVE CARS ONLY**
53203	Roof Assembly		1	
170560	R.H. Front Door Shell Assembly		1	
170569	L.H. Front Door Shell Assembly		1	
170562	R.H. Rear Door Shell Assembly		1	
170561	L.H. Rear Door Shell Assembly		1	
53194	Bulkhead, Windscreen and ' A ' Post Assembly		1	
53196	Main Floor Assembly		1	
53198	R.H. Door Sill Assembly		1	
53197	L.H. Door Sill Assembly		1	
53200	R.H. ' B.C. ' Post Assembly		1	
53199	L.H. ' B.C. ' Post Assembly		1	
170493	R.H. ' D ' Post Upper Assembly		1	
170492	L.H. ' D ' Post Upper Assembly		1	
170588	R.H. ' D ' Post Lower Assembly		1	
170587	L.H. ' D ' Post Lower Assembly		1	
243/122	R.H. Rear Quarter Assembly		1	
243/121	L.H. Rear Quarter Assembly		1	
243/504	Luggage Floor Assembly		1	
243/110	R.H. Wheel Arch Assembly		1	
243/109	L.H. Wheel Arch Assembly		1	
94/634032	Cover Plate, Front Floor		1	

Part No.	Description	Plate No.	No. per Unit	Remarks
94/669014	**FRONT WING ASSEMBLY, R.H.**		1	
94/669013	**FRONT WING ASSEMBLY, L.H.**		1	
94/669012	**FRONT WING VALANCE, R.H.**		1	
94/669011	**FRONT WING VALANCE, L.H.**		1	
12104/06	**Screw,** Set, securing Wing to Valance		12	
423654	**Washer,** Plain, on Setscrews		16	
430241/04	**Washer,** Spring, on Setscrews		12	
12104/06	**Screw,** Set, securing Wing to Dash		6	
423654	**Washer,** Plain, on Setscrews		6	
430241/04	**Washer,** Spring, on Setscrews		6	
12104/06	**Screw,** Set, securing Wing to Body		4	
13105	**Nut,** on Setscrews		4	
430241/04	**Washer,** Spring, under Nuts		4	
11105/10	**Screw,** Set, securing Wing to Body		2	
423654	**Washer,** Plain, on Setscrews		8	
430241/05	**Washer,** Spring, on Setscrews		2	
92/659209	**RUBBER SEAL FOR VALANCE (50" LONG)**		2	
94/669064	**MUDSHIELD ASSEMBLY, R.H. FRONT WING**		1	
63/669063	**MUDSHIELD ASSEMBLY, L.H. FRONT WING**		1	
12105/06	**Screw,** Set, securing Mudshield and Valance to Dash		10	
423654	**Washer,** Plain, on Setscrew		20	
430241/05	**Washer,** Spring, on Setscrews		10	
12104/04	**Screw,** Set, securing Mudshield to Wing		6	
423654	**Washer,** Plain, on Setscrews		6	
430241/04	**Washer,** Spring, on Setscrews		6	

BODY PANELS

Part No.	Description	Plate No.	No. per Unit	Remarks
63/659032	**STRUT FOR R.H. FRONT WING MUD-SHIELD**		1	
63/659031	**STRUT FOR L.H. FRONT WING MUD-SHIELD**		1	
12104/05	**Screw,** Set, securing Struts to Chassis Frame and Valance		4	
13104	**Nut,** on Setscrews		4	
422500/01	**Washer,** Plain, on Setscrews		6	
430241/04	**Washer,** Spring, under Nuts		4	
92/669078	**MAKE-UP PIECE BETWEEN R.H. FRONT WING AND RADIATOR**		1	
92/669077	**MAKE-UP PIECE BETWEEN L.H. FRONT WING AND RADIATOR**		1	
12104/08	**Screw,** Set, securing Make-up Piece to Wing and Valance		6	
423654	**Washer,** Plain, on Setscrew		6	
430241/04	**Washer,** Spring, on Setscrew		6	
12104/08	**Screw,** Set, securing Make-up Piece to Wing and Valance and Radiator Support Bracket		2	
13104	**Nut,** on Setscrews		2	
423654	**Washer,** Plain, on Setscrews		2	
430241/04	**Washer,** Spring, under Nuts		2	
12104/05	**Screw,** Set, securing Make-up Piece to Front Apron		2	
423654	**Washer,** Plain, on Setscrews		2	
430241/04	**Washer,** Spring, on Setscrews		2	
BD.25761	**SUPPORT FOR R.H. FRONT WING**		1	
BD.25760	**SUPPORT FOR L.H. FRONT WING**		1	
92/659133	**Reinforcing Bracket,** at attachment of Front Wing		2	
92/645394	**PLATE SEALING R.H. FRONT WING**		1	
92/645393	**PLATE SEALING L.H. FRONT WING**		1	
12104/04	**Screw,** Set, securing Sealing Plates to Front Wings		4	
422500/01	**Washer,** Plain, on Setscrews		4	

Part No.	Description	Plate No.	No. per Unit	Remarks
92/669153	**COWL ASSEMBLY FOR SIDE LAMP**		2	
426933/33	**Screw,** securing Cowl to Front Wings		4	
430241/03	**Washer,** Spring, on Screws		4	
431597	**Washer,** Seating, Cowl to Wing		2	
92/659030	**APRON BEHIND FRONT BUMPER**		1	Fitted from Chassis No. 136711 to 137011 DQ.450 And to all DQ.451
94/659030	**APRON BEHIND FRONT BUMPER**		1	Fitted to Chassis No. 137012 and subs. DQ.450 And to all DR.450/1
12104/06	**Screw,** Set, securing Apron to Front Wings		12	
13104	**Nut,** on Setscrews		12	
423654	**Washer,** Plain, on Setscrews		24	
430241/04	**Washer,** Spring, under Nuts		12	
12104/05	**Screw,** Set, securing Apron to Radiator Grille		2	
423654	**Washer,** Plain, on Setscrews		2	
430241/04	**Washer,** Spring, on Setscrews		2	
92/669001	**BONNET ASSEMBLY, COMPLETE WITH STRIKER AND SAFETY CATCH FOR LOCK**		1	
223/400	**ROOF ASSEMBLY**		1	**DQ.450/1 ONLY**
53203	**ROOF ASSEMBLY**		1	**DR.450/1. ONLY**
223/302	**R.H. FRONT DOOR SHELL ASSEMBLY**		1	**DQ.450/1 ONLY**
223/301	**L.H. FRONT DOOR SHELL ASSEMBLY**		1	
170560	**R.H. FRONT DOOR SHELL ASSEMBLY**		1	**DR.450/1 ONLY**
170559	**L.H. FRONT DOOR SHELL ASSEMBLY**		1	

BODY PANELS

Part No.	Description	Plate No.	No. per Unit	Remarks
223/352	R.H. REAR DOOR SHELL ASSEMBLY		1	DQ.450/1 ONLY.
223/351	L.H. REAR DOOR SHELL ASSEMBLY		1	
170562	R.H. REAR DOOR SHELL ASSEMBLY		1	DR.450/1 ONLY.
170561	L.H. REAR DOOR SHELL ASSEMBLY		1	
223/804	WINDSCREEN PANEL ASSEMBLY		1	DQ.450/1 ONLY.
223/104	R.H. 'A' POST PANEL ASSEMBLY		1	
223/103	L.H. 'A' POST PANEL ASSEMBLY		1	
53194	BULKHEAD ASSEMBLY, INCLUDING WINDSCREEN PANEL AND 'A' POSTS		1	DR.450/1 ONLY.
223/500	MAIN FLOOR ASSEMBLY		1	DQ.450/1 ONLY.
53196	MAIN FLOOR ASSEMBLY		1	DR.450/1 ONLY.
223/542	R.H. DOOR SILL ASSEMBLY		1	DQ.450/1 ONLY.
223/541	L.H. DOOR SILL ASSEMBLY		1	

Part No.	Description	Plate No.	No. per Unit	Remarks
53198	R.H. DOOR SILL ASSEMBLY		1	DR.450/1 ONLY
53197	L.H. DOOR SILL ASSEMBLY		1	
223/118	R.H. 'B/C' POST ASSEMBLY		1	DQ.450/1 ONLY
223/117	L.H. 'B/C' POST ASSEMBLY		1	
53200	R.H. 'B/C' POST ASSEMBLY		1	DR.450/1 ONLY
53199	L.H. 'B/C' POST ASSEMBLY		1	
223/202	R.H. 'D' POST UPPER ASSEMBLY		1	DQ.450/1 ONLY
223/201	L.H. 'D' POST UPPER ASSEMBLY		1	
223/114	R.H. 'D' POST LOWER ASSEMBLY		1	DQ.450/1 ONLY
223/113	L.H. 'D' POST LOWER ASSEMBLY		1	

BODY PANELS

Part No.	Description	Plate No.	No. per Unit	Remarks
170493	**R.H. 'D' POST UPPER ASSEMBLY**		1	DR.450/1. ONLY.
170492	**L.H. 'D' POST UPPER ASSEMBLY**		1	DR.450/1. ONLY.
170588	**R.H. 'D' POST LOWER ASSEMBLY**		1	DR.450/1. ONLY.
170587	**L.H. 'D' POST LOWER ASSEMBLY**		1	DR.450/1. ONLY.
243/122	**R.H. REAR QUARTER ASSEMBLY**		1	DQ.450/1 ONLY.
243/121	**L.H. REAR QUARTER ASSEMBLY**		1	DQ.450/1 ONLY.
243/054	**LUGGAGE FLOOR ASSEMBLY**		1	
223/110	**R.H. WHEEL ARCH ASSEMBLY**		1	
223/109	**L.H. WHEEL ARCH ASSEMBLY**		1	
94/632278	**APRON, BEHIND REAR BUMPER**		1	
423187/08	**Screw,** securing Apron to Body		6	
12104/08	**Screw,** Set, securing Apron to Body		8	
422500/01	**Washer,** Plain, on Setscrews		8	
430241/04	**Washer,** Spring, on Setscrews		8	
423186/02	**Piping,** Plastic, (66" long) for Apron		1	
243/300	**TRUNK LID ASSEMBLY**		1	

Part No.	Description	Plate No.	No. per Unit	Remarks
134811	**FRONT BUMPER ASSEMBLY (0/3290)**		1	
134810	**Bumper Bar Assembly** (0/3285)		1	
308688	**Spring,** (Leaf) supporting Bumpers (0/4828)		2	
1447	**Over-rider** (0/2249)		2	
209	**Over-rider Moulding** (RS.66/1)		4	
133396/02	**Nut,** securing Bumper Bar, and Over-rider to Spring (RS.11/12)		4	
133396/03	**Washer,** Plain, under Nuts (RS.14/101)		4	
134647/01	**Washer,** Spring, under Nuts (RS.12/46)		4	
308498	**BRACKET, R.H. SECURING FRONT BUMPER TO FRAME**		1	
308499	**BRACKET, L.H. SECURING FRONT BUMPER TO FRAME**		1	
431164	**Packing Piece**		As req'd	
11106/08	**Bolt,** securing Bracket to Frame		4	
422514/07	**Nut,** Nyloc, on Bolts		4	
11106/09	**Bolt,** securing Bumper to Bracket		4	
422514/07	**Nut,** Nyloc, on Bolts		4	
422500/03	**Washer,** Plain, under Nuts		4	
11106/12	**Bolt,** securing Bumper to Bracket		4	**USED WHEN 3 OFF PACKING PIECE PT. No. 431164 ARE FITTED**
305756	**BRACKET FOR FOG AND PASS LAMP**		1	
11105/06	**Bolt,** securing Bracket to Bumper Spring		4	
13105	**Nut,** on Bolts		4	
430241/05	**Washer,** Spring, under Nuts		4	
304842	**PLATE, SUPPORTING FRONT NUMBER PLATE**		1	
326315	**Packing Piece**		3	
12304/09	**Screw,** Set, securing Support Plate		3	
13104	**Nut,** on Setscrews		3	
423654	**Washer,** Plain, under Nuts		3	
430241/04	**Washer,** Spring, under Nuts		3	
26247	**RADIATOR GRILLE AND SURROUND ASSEMBLY**		1	
26199	**Radiator Surround Assembly**		1	
26203	**R.H. Grille Assembly**		1	
26204	**L.H. Grille Assembly**		1	

BODY FITTINGS

Part No.	Description	Plate No.	No. per Unit	Remarks
26199	**RADIATOR SURROUND ASSEMBLY**		1	
430779	**Fixing Bracket,** R.H. side, for Grille		1	
430780	**Fixing Bracket,** L.H. side, for Grille		1	
430769	**Cover,** over Starting Handle Hole		1	
92/659209	**RUBBER SEAL FOR VALANCES**		2	
425269/05	**Rivet,** securing Seal (TAP/D/BS/440)		4	
426087/02	**Cup,** Brass, on Rivets		4	
423199/05	**Washer,** Plain, on Rivets		4	
92/635392	**RUBBER SEAL FOR FRONT WING**		2	
92/659210	**RUBBER SEAL FOR BONNET**		1	
425269/05	**Rivet,** securing Seal (TAP/D/BS/440)		8	
423199/05	**Washer,** Plain, on Rivets		8	
92/669205	**BONNET HINGE ASSEMBLY**		2	
11104/06	**Bolt,** securing Hinge to Bonnet		8	
422500/01	**Washer,** Plain, on Bolts		8	
430241/04	**Washer,** Spring, on Bolts		8	
11105/06	**Bolt,** securing Hinge to Bulkhead		8	
422500/02	**Washer,** Plain, on Bolts		8	
92/669204	**BONNET LOCK STRIKER ASSEMBLY**		1	
13104	**Nut,** securing Striker Assembly to Bonnet		4	
422500/01	**Washer,** Plain, under Nuts		4	
430241/04	**Washer,** Spring, under Nuts		4	
92/669200	**SUPPORT ASSEMBLY FOR BONNET LOCK STRIKER PLATE**		1	
94/659052	**Bracket** for Bonnet Catch Support		1	
12104/04	**Screw,** Set, securing Bracket to Fan Cowl		2	
13104	**Nut** on Setscrews		2	
430241/04	**Washer,** Spring, under Nuts		2	

BODY FITTINGS

Part No.	Description	Plate No.	No. per Unit	Remarks
92/659202	**STRIKER PLATE FOR BONNET LOCK (INNER SLIDE)**		1	
92/669201	**STRIKER PLATE ASSEMBLY (INNER) FOR BONNET LOCK**		1	
11104/08	**Screw,** Set, securing Inner Slides and Striker Plate to Support Plate		2	
430241/04	**Washer,** Spring, on Setscrews		2	
92/659203	**Spring,** returning Striker Plate		1	
304742	**SAFETY CATCH FOR BONNET**		1	
11104/04	**Screw,** Set, securing Safety Catch to Bonnet		2	
13104	**Nut,** on Setscrews		2	
422500/01	**Washer,** Plain, on Setscrews		2	
430241/04	**Washer,** Spring, under Nuts		2	
308204/01	**CONTROL CABLE ASSEMBLY FOR BONNET LOCK**		1	
431621	**Handle,** on Control Cable		1	
431622	**Grubscrew,** securing Handle to Control Cable		1	
92/659415	**RUBBER BUFFER FOR BONNET**		2	
C.4691	**INDICATOR IN SIDELAMP CASING**		2	
C.4098/2	**Clip,** securing Indicator to Casing		2	
431597	**SEALING WASHER FOR SIDELAMP**		2	
92/641105	**GRILLE FOR PLENUM CHAMBER**		1	
221/060	**Clip** (Large) securing Grille		2	
221/061	**Clip** (Small) securing Grille		6	
425285/02	**Screw,** fixing Grille to Bulkhead		4	

BODY FITTINGS

Part No.	Description	Plate No.	No. per Unit	Remarks
92/641106	LATTICE, FOR PLENUM CHAMBER		1	
94/635103	PLENUM CHAMBER TUBE		1	
423176/14	Clip, for Plenum Tube Hose		1	
432456	Clip, securing Plenum Tube to Dash		1	
423187/23	Screw, securing Clip		1	
92/635100	WINDSCREEN GLASS (TOUGHENED)		1	
92/675130	WINDSCREEN GLASS (LAMINATED)		1	
170905	WINDSCREEN GLASS (ZONE TOUGHENED)		1	SUPPLIED TO SPECIAL ORDER FOR R.H. DRIVE CARS ONLY
170906	WINDSCREEN GLASS (ZONE TOUGHENED)		1	SUPPLIED TO SPECIAL ORDER FOR L.H. DRIVE CARS ONLY
92/635378	RUBBER SEAL FOR WINDSCREEN GLASS		1	
92/635379	RUBBER FILLER STRIP FOR WIND-SCREEN		1	
92/631484	CHROME FRAME FINISHER, R.H. FOR WINDSCREEN		1	
92/631483	CHROME FRAME FINISHER, L.H. FOR WINDSCREEN		1	

Part No.	Description	Plate No.	No. per Unit	Remarks
92/637178	JOINTING PIECE AT CENTRE OF CHROME FRAME FINISHERS		2	
92/643419	R.H. SUN VISOR ASSEMBLY		1	R.H. DRIVE CARS ONLY
92/643420	L.H. SUN VISOR ASSEMBLY (COMPLETE WITH MIRROR)		1	
93/643419	L.H. SUN VISOR ASSEMBLY		1	L.H. DRIVE CARS ONLY
93/643420	R.H. SUN VISOR ASSEMBLY (COMPLETE WITH MIRROR)		1	
87531/10	Screw, Set, securing Visors to Body		6	
63/641799	INTERIOR DRIVING MIRROR		1	
423190/30	Screw, (Chrome) securing Driving Mirror to Roof		2	
426087/06	Cup (Chrome) on Screws		2	
308643	STAY (LONG) SECURING STEERING COLUMN TO DASH		1	
308644	STAY (SHORT) SECURING STEERING COLUMN TO DASH		1	R.H. DRIVE CARS ONLY

BODY FITTINGS

Part No.	Description	Plate No.	No. per Unit	Remarks
308774	**STAY (SHORT) SECURING STEERING COLUMN TO DASH**		1	**L.H. DRIVE CARS ONLY**
433068	**Distance Piece,** between Short Stay and Dash		1	**R.H. DRIVE CARS ONLY**
11105/32	**Bolt,** securing Stays to Steering Column		1	
13105	**Nut,** on Bolt		1	
422500/02	**Washer,** Plain, on Bolt		2	
430241/05	**Washer,** Spring, under Nut		1	
12105/10	**Screw,** Set, securing Short Stay to Dash		1	**R.H. DRIVE CARS ONLY**
12105/06	**Screw,** Set, securing Short Stay to Dash		1	**L.H. DRIVE CARS ONLY**
422500/02	**Washer,** Plain, on Setscrew		1	
430241/05	**Washer,** Spring, on Setscrew		1	
13104	**Nut,** securing Long Stay to Handbrake Attachment Plate Fixing Bolt		1	
422500/01	**Washer,** Plain, on Fixing Bolt		1	
430241/04	**Washer,** Spring, under Nut		1	
92/635247	**ATTACHMENT PLATE ASSEMBLY FOR HANDBRAKE LEVER**		1	**R.H. DRIVE CARS ONLY**
93/635247	**ATTACHMENT PLATE ASSEMBLY FOR HANDBRAKE LEVER**		1	**L.H. DRIVE CARS ONLY**
92/645246	**ABUTMENT BRACKET FOR HAND-BRAKE CABLE**		1	**R.H. DRIVE CARS ONLY**
93/645246	**ABUTMENT BRACKET FOR HAND-BRAKE CABLE**		1	**L.H. DRIVE CARS ONLY**
12105/06	**Screw,** Set, securing Handbrake Lever Assembly to Attachment Plate		2	
13105	**Nut,** on Setscrews		2	
422500/02	**Washer,** Plain, on Setscrews		2	
430241/05	**Washer,** Spring, under Nuts		2	
12104/10	**Screw,** Set, securing Attachment Plate, Abutment Bracket and Steering Column Stay to Dash		1	
12604/06	**Screw,** Set, securing Attachment Plate and Abutment Bracket to Dash		2	
12104/06	**Screw,** Set, securing Attachment Plate to Dash		2	
13104	**Nut,** on Setscrews		5	
422500/01	**Washer,** Plain, on Setscrews		7	
430241/04	**Washer,** Spring, under Nuts		5	
308593	**DRAUGHT EXCLUDER ON STEERING COLUMN**		1	
278726	**FERRULE IN DRAUGHT EXCLUDER**		1	

BODY FITTINGS

Part No.	Description	Plate No.	No. per Unit	Remarks
432139	**SUPPORT PLATE ASSEMBLY BEHIND DRAUGHT EXCLUDER**		1	
53125	**SCUTTLE TOP CASING ASSEMBLY**		1	**R.H. DRIVE CARS ONLY**
53136	**SCUTTLE TOP CASING ASSEMBLY**		1	**L.H. DRIVE CARS ONLY**
423187/09	**Screw,** securing Top Casing to Body		16	
170432	**R.H. SIDE CASING FOR DASH**		1	
170431	**L.H. SIDE CASING FOR DASH**		1	
423190/11	**Screw,** securing Side Casings to Body		6	
53068	**FRONT BENCH SEAT COMPLETE ASSEMBLY**		1	
170253	**ARMREST ASSEMBLY FOR FRONT SEAT**		1	
BD.12446	**ASHTRAY FOR BACK OF FRONT SEAT**		2	
222/130	**SEAT RUNNER ASSEMBLY COMPLETE WITH CATCH**		2	
11105/06	**Bolt,** securing Seat Runner to Frame		4	
13105	**Nut,** on Bolts		4	
430241/05	**Washer,** Spring, under Nuts		4	
11105/10	**Bolt,** securing Seat Runner to Floor		4	
430241/05	**Washer,** Spring, on Bolts		4	

BODY FITTINGS

Part No.	Description	Plate No.	No. per Unit	Remarks
53112	**R.H. SPLIT TYPE FRONT SEAT ASSEMBLY COMPLETE**		1	Alternatives to Part No. 53068.
53111	**L.H. SPLIT TYPE FRONT SEAT ASSEMBLY COMPLETE**		1	
170177	**TRIM PANEL ASSEMBLY ON R.H. 'B.C.' POST**		1	
170176	**TRIM PANEL ASSEMBLY ON L.H. 'B.C.' POST**		1	
92/643094	**ROOF LINING ASSEMBLY (HEADCLOTH)**		1	
92/643170	**CENTRE ROOF BOW**		1	
12704/04	Screw, Set, securing Centre Roof Bow to Body		4	
422500/01	Washer, Plain, on Setscrews		4	
170551	**TACKING STRIP FOR CENTRE ROOF BOW**		1	
170466	**No. 1 LISTING STICK FOR ROOF**		1	
170467	**No. 2 LISTING STICK FOR ROOF**		1	
170472	**No. 3 LISTING STICK ASSEMBLY FOR ROOF**		1	
170469	**No. 4 LISTING STICK FOR ROOF**		1	
170470	**No. 5 LISTING STICK FOR ROOF**		1	
423187/08	Screw, securing Listing Sticks to Body		20	

Part No.	Description	Plate No.	No. per Unit	Remarks
94/645377	**FACIA PANEL ASSEMBLY**		1	R.H. DRIVE CARS ONLY
95/645377	**FACIA PANEL ASSEMBLY**		1	L.H. DRIVE CARS ONLY
92/647215	**ASHTRAY ASSEMBLY IN FACIA**		1	
94/635423	**FRONT PANEL, FOR ASHTRAY**		1	
53/645133	**LOCK FOR CUBBY BOX LID**		1	
170213	**WINDSCREEN HEADER CAPPING, R.H.**		1	
170212	**WINDSCREEN HEADER CAPPING, L.H.**		1	
423190/05	Screw, (Chrome) securing Header Capping to Roof		4	
426088/01	Cup (Chrome) on Screws		4	
470074	Joint Cover (Chrome) at Centre of Header Cappings		1	
87102/04	Screw, Wood, securing Joint Cover		1	
170194	**CAPPING FOR R.H. 'A' POST**		1	
170193	**CAPPING FOR L.H. 'A' POST**		1	
423190/11	Screw (Chrome) securing Cappings		2	

BODY FITTINGS

Part No.	Description	Plate No.	No. per Unit	Remarks
170209	**CANTRAIL CAPPING, R.H.**		1	
170208	**CANTRAIL CAPPING, L.H.**		1	
423190/04	**Screw**, securing Cappings to Cantrail		12	
	Cup, (Chrome) on Screws		12	
470113	**Joint Cover** (Chrome), for R.H. Capping		1	
470112	**Joint Cover** (Chrome), for L.H. Capping		1	
87102/04	**Screw**, Wood, securing Covers to Cappings		2	
170203	**TOP CAPPING FOR R.H. FRONT DOOR**		1	
170202	**TOP CAPPING FOR L.H. FRONT DOOR**		1	
423190/05	**Screw** (Chrome), securing Top Capping to Waist Capping		8	
426088/01	**Cup** (Chrome), on Screws		8	
170199	**WAIST CAPPING FOR R.H. FRONT DOOR**		1	
170198	**WAIST CAPPING FOR L.H. FRONT DOOR**		1	
423189/13	**Screw**, securing Waist Cappings to Doors		4	
170196	**CAPPING FOR R.H. 'B/C' POST**		1	
170195	**CAPPING FOR L.H. 'B.C.' POST**		1	
423190/04	**Screw** (Chrome), securing Cappings		6	
170205	**TOP CAPPING FOR R.H. REAR DOOR**		1	
170204	**TOP CAPPING FOR L.H. REAR DOOR**		1	
423190/05	**Screw** (Chrome), securing Top Cappings to Waist Cappings		8	
426088/01	**Cup** (Chrome), on Screws		8	

Part No.	Description	Plate No.	No. per Unit	Remarks
170201	**WAIST CAPPING FOR R.H. REAR DOOR**		1	
170200	**WAIST CAPPING FOR L.H. REAR DOOR**		1	
423189/13	**Screw**, securing Waist Cappings to Doors		4	
170192	**WAIST CAPPING FOR R.H. REAR QUARTER**		1	
170191	**WAIST CAPPING FOR L.H. REAR QUARTER**		1	
423190/14	**Screw** (Chrome), securing Waist Cappings to Body		6	
170215	**TOP CAPPING FOR R.H. REAR QUARTER LIGHT**		1	
170214	**TOP CAPPING FOR L.H. REAR QUARTER LIGHT**		1	
423190/14	**Screw** (Chrome), securing Top Cappings to Body		6	
426088/93	**Cup** (Chrome), on Screws		6	
170211	**CAPPING FOR R.H. 'D' POST**		1	
170210	**CAPPING FOR L.H. 'D' POST**		1	
423190/11	**Screw** (Chrome), securing Cappings		4	
53091	**REAR SEAT CUSHION ASSEMBLY**		1	
53088	**REAR SEAT SQUAB ASSEMBLY**		1	

BODY FITTINGS

Part No.	Description	Plate No.	No. per Unit	Remarks
170292	**ARMREST ASSEMBLY FOR REAR SEAT**		1	
67/641488	**LOOP PULL AT R.H. REAR QUARTER**		1	
67/641487	**LOOP PULL AT L.H. REAR QUARTER**		1	
170182	**TRIM PAD ASSEMBLY FOR R.H. REAR QUARTER**		1	
170181	**TRIM PAD ASSEMBLY FOR L.H. REAR QUARTER**		1	
92/642100	**NO DRAUGHT VENTILATOR ASSEMBLY FOR R.H. REAR QUARTER**		1	
225/332	Catch, for R.H. No Draught Ventilator		1	
92/642099	**NO DRAUGHT VENTILATOR ASSEMBLY FOR L.H. REAR QUARTER**		1	
225/331	Catch, for L.H. No Draught Ventilator		1	
92/632885	**RUBBER SEAL AT TOP OF REAR QUARTER NO DRAUGHT VENTILATORS**		2	
92/632884	**RUBBER SEAL AT FRONT OF REAR QUARTER NO DRAUGHT VENTILATORS**		2	
92/632883	**RUBBER SEAL AT BOTTOM OF REAR QUARTER NO DRAUGHT VENTILATORS**		2	

BODY FITTINGS

Part No.	Description	Plate No.	No. per Unit	Remarks
62/633347	**BACKLIGHT GLASS (TOUGHENED)**		1	
92/633125	**BACKLIGHT GLASS (LAMINATED)**		1	ALTERNATIVE TO 63/633347.
92/631760	**RUBBER SEAL FOR BACKLIGHT GLASS**		1	
92/631761	**FILLER STRIP FOR BACKLIGHT SEAL**		1	
92/631486	**R.H. FRAME FINISHER FOR BACK-LIGHT**		1	
92/631485	**L.H. FRAME FINISHER FOR BACK-LIGHT**		1	
92/637178	**JOINT COVER FOR FRAME FINISHERS**		2	
63/626034	**HINGE ASSEMBLY FOR TRUNK LID**		2	
63/636773	**Packing Piece,** for Trunk Lid Hinge		As req'd	
12105/06	**Screw,** Set, securing Hinge to Lid		8	
422500/02	**Washer,** Plain, on Setscrews		8	
422508/22	**Washer,** Shakeproof, on Setscrews		8	
12104/04	**Screw,** Set, securing Hinge to Body		8	
422500/01	**Washer,** Plain, on Setscrews		8	
422508/15	**Washer,** Spring, on Setscrews		8	
94/632598	**RUBBER SEAL FOR TRUNK OPENING**		1	
92/659145	**RUBBER BUFFER FOR TRUNK LID**		2	

BODY FITTINGS

Part No.	Description	Plate No.	No. per Unit	Remarks
63/636602	**CENTRE MOTIF FOR TRUNK LID**		1	
63/636671	**ATTACHMENT ANGLE FOR CENTRE MOTIF**		1	
63/636604	**R.H. SIDE MOTIF FOR TRUNK LID**		1	
63/636603	**L.H. SIDE MOTIF FOR TRUNK LID**		1	
63/636611	**SEALING PAD FOR MOTIF**		1	
87623/04	**Screw**, Set, securing Side Motifs to Centre Motif		6	
430241/03	**Washer**, Spring, on Setscrews		6	
423195/34	**Screw**, Set, securing Motif to Trunk Lid		10	
422543/2	**Nut**, on Setscrews		4	
430241/03	**Washer**, Spring, on Setscrews		10	
90025/02	**Screw**, securing Motif to Attachment Angle		1	
423187/02	**Screw**, securing Attachment Angle to Trunk Lid		3	
63/641385	**LOCKING BARREL FOR TRUNK LID**		1	
65/641255	**LOCK ASSEMBLY FOR TRUNK LID**		1	
222/236	**Striker Plate**, for Trunk Lock		1	
63/632876	**Packing Piece**, for Striker Plate		As req'd	
87623/03	**Screw**, Set, securing Lock to Bracket and Trunk Lid		2	
87623/04	**Screw**, Set, securing Lock to Bracket and Trunk Lid		2	
422543/2	**Nut**, on Setscrews		2	
423199/02	**Washer**, Plain, on Setscrews		4	
430241/03	**Washer**, Spring, on Setscrews		4	
11104/10	**Screw**, Set, securing Trunk Lock Striker Plate to Body		2	
13104	**Nut**, on Setscrews		2	
422500/01	**Washer**, Plain, on Setscrews		2	
430241/04	**Washer**, Spring, under Nuts		2	
63/646605	**BRACKET FOR REAR NUMBER PLATE LAMP**		1	

BODY FITTINGS

Part No.	Description	Plate No.	No. per Unit	Remarks
308702	**BATTERY CRADLE ASSEMBLY**		1	
432257	**Rubber,** for Battery Cradle Assembly		2	
432258/01	**Rubber,** for Battery Cradle Assembly		1	
432258/02	**Rubber,** for Battery Cradle Assembly		2	
432258/03	**Rubber,** for Battery Cradle Assembly		1	
432258/04	**Rubber,** for Battery Cradle Assembly		1	
308695	**ANGLE ASSEMBLY RETAINING BATTERY**		1	
422542/11	**Rod,** securing Battery		2	
13204	**Nut,** securing Rods		2	
88602	**Nut,** Wing, on Rods		2	
422500/01	**Washer,** Plain, under Wing Nuts		2	
53221	**BATTERY BOX COVER ASSEMBLY**		1	
370313	**LID ASSEMBLY FOR BATTERY BOX**		1	
170549	**SPARE WHEEL COVER ASSEMBLY**		1	Fitted from Chassis No. 136711 to 137011 DQ.450 And to all DQ.451
BD.24157	**SPARE WHEEL COVER ASSEMBLY**		1	Fitted to Chassis No. 137012 and subs. DQ.450
51/647143	**Turnbutton Assembly,** securing Spare Wheel Cover to Luggage Floor		2	
423189/05	**Screw,** securing Turnbutton to Luggage Floor		6	
94/641839	**TOP STRAP ASSEMBLY FOR PETROL TANK**		2	
94/641840	**REAR STRAP ASSEMBLY FOR PETROL TANK**		2	
11105/05	**Bolt,** securing Top Straps to Body		2	
11105/07	**Bolt,** securing Rear Straps to Body		2	
11105/07	**Bolt,** securing Top Straps to Rear Straps		2	
430241/05	**Washer, Spring, on Bolts**		6	

BODY FITTINGS

Part No.	Description	Plate No.	No per Unit	Remarks
75/637438	**SEAL RING FOR PETROL TANK (BOTTOM)**		1	
136326	**REAR BUMPER ASSEMBLY (0/4831)**		1	
136293	**Bumper Bar Assembly** (0/4818)		1	
308357	**Spring,** (Leaf), supporting Bumper (0/4819)		2	
133396/02	**Nut,** securing Bumper Bar to Spring (RS.11/18)		4	
133396/03	**Washer,** Plain, under Nuts (RS.14/101)		4	
134647/01	**Washer,** Spring, under Nuts (RS.12/46)		4	
1447	**Over-rider** (0/2249)		2	
209	**Over-rider Moulding** (RS.66/1)		4	
133396/02	**Nut,** securing Over-Riders to Bumper (RS.11/12)		4	
134787/02	**Washer,** Plain, under Nuts (RS.14/77)		4	
134647/01	**Washer,** Spring, under Nuts (RS.12/46)		4	
305655	**MEDALLION FOR REAR BUMPER**		1	
13104	**Nut,** securing Medallion to Rear Bumper		2	
423654	**Washer,** Plain, under Nuts		2	
430241/04	**Washer,** Spring, under Nuts		2	
136296	**BRACKET SECURING REAR BUMPER TO FRAME**		2	
432944	**Packing Piece**		As req'd	
11106/09	**Bolt,** securing Bumper to Brackets		4	
11106/08	**Bolt,** securing Brackets to Frame		4	
422514/07	**Nut,** Nyloc, on Bolts		8	
422500/03	**Washer,** Plain, under Nuts		4	
11106/11	**Bolt,** securing Bumper to Brackets		4	**USED WHEN UP TO 2 OFF PACKING PIECE PART No. 432944 ARE FITTED**
94/669192	**'D' MOTIF ON BONNET**		1	
94/659193	**Seating Washer,** for 'D' Motif		1	
13104	**Nut,** securing 'D' Motif to Bonnet		2	
430241/04	**Washer,** Spring, under Nuts		2	
92/669190	**CHROME BONNET MOTIF ASSEMBLY**		1	
422543/1	**Nut,** securing Motif to Bonnet		4	
430241/04	**Washer,** Spring, under Nuts		4	

Part No.	Description	Plate No.	No. per Unit	Remarks
92/659208	**CHROME MOULDING ON R.H. SIDE OF BONNET**		1	
92/659207	**CHROME MOULDING ON L.H. SIDE OF BONNET**		1	
94/637175	Clip, securing Bonnet Moulding		22	
425269/04	Rivet, securing Clips (TAP/D/BS/420)		22	
92/655126	**CHROME MOULDING ON R.H. SIDE OF SCUTTLE**		1	
92/655125	**CHROME MOULDING ON L.H. SIDE OF SCUTTLE**		1	
94/637175	Clip, securing Scuttle Mouldings		4	
425269/04	Rivet, securing Clips (TAP/D/BS/420)		4	
92/636170	**CHROME MOULDING FOR R.H. FRONT DOOR**		1	
92/636169	**CHROME MOULDING FOR L.H. FRONT DOOR**		1	
94/637175	Clip, securing Mouldings to Doors		16	
425269/04	Rivet, securing Clips to Doors (TAP/D/BS/420)		16	
470128	**CHROME FINISHER TOP REAR OF R.H. FRONT DOOR (WAIST)**		1	
470127	**CHROME FINISHER TOP REAR OF L.H. FRONT DOOR (WAIST)**		1	
92/636171	**CHROME MOULDING FOR REAR DOORS**		2	
94/637175	Clip, securing Mouldings to Doors		14	
425269/04	Rivet, securing Clips to Doors (TAP/D/BS/420)		14	

BODY FITTINGS

Part No.	Description	Plate No.	No. per Unit	Remarks
470130	**CHROME FINISHER TOP REAR OF R.H. REAR DOOR (WAIST)**		1	
470129	**CHROME FINISHER TOP REAR OF L.H. REAR DOOR (WAIST)**		1	
92/632294	**CHROME MOULDING FOR REAR QUARTER**		2	
94/637175	**Clip,** securing Mouldings to Rear Quarters		8	
425269/04	**Rivet,** securing Clips to Rear Quarters (TAP/D/BS/420)		8	
92/642374	**Stud Assembly,** securing Rear Quarter Mouldings		8	
422543/4	**Nut,** on Studs		8	
430241/03	**Washer,** Spring, under Nuts		8	
423199/05	**Washer,** Plain, under Spring Washers		8	
BD.24037	**R.H. FRONT DOOR FULLY TRIMMED (COMPLETE WITH ALL FITTINGS)**		1	
BD.24036	**L.H. FRONT DOOR FULLY TRIMMED (COMPLETE WITH ALL FITTINGS)**		1	
BD.24039	**R.H. FRONT DOOR ASSEMBLY LESS LOCK AND REMOTE CONTROL**		1	
BD.24038	**L.H. FRONT DOOR ASSEMBLY LESS LOCK AND REMOTE CONTROL**		1	
63/626062	**LOCK AND REMOTE CONTROL ASSEMBLY FOR R.H. FRONT DOOR**		1	
63/626061	**LOCK AND REMOTE CONTROL ASSEMBLY FOR L.H. FRONT DOOR**		1	
423195/33	**Screw,** securing Lock and Remote Controls to Doors		14	
51/617082	**Washer,** Special, on Screws		6	
422508/10	**Washer,** Shakeproof, on Screws		14	

Part No.	Description	Plate No.	No per Unit	Remarks
51/621052	**STRIKER FOR R.H. FRONT DOOR LOCK**		1	
51/621051	**STRIKER FOR L.H. FRONT DOOR LOCK**		1	
87513/05	**Screw,** securing Strikers		8	
63/646566	**OUTSIDE HANDLE (LOCKING) FOR FRONT DOORS**		2	
63/697410	**Locking Barrel,** for Outside Handles		2	
63/636569	**End Clip,** for Handles		2	
63/637234	**Seating Washer,** for End Clips		2	
63/637233	**Seating Washer,** for Handles		2	
51/636243	**INSIDE HANDLE FOR FRONT DOOR LOCKS**		2	
51/636245	**Escutcheon,** for Front Door Handles		2	
51/636244	**Locking Pin,** for Handles		2	
92/646416	**R.H. FRONT DOOR LIGHT FRAME, COMPLETE WITH N.D. VENTILATOR**		1	
225/312	**Rubber Seal,** for Glass Frame		1	
225/309	**Felt,** for Glass (Short)		1	
225/310	**Felt,** for Glass (Long)		1	
225/308	**Rubber Seal,** for No Draught Ventilator		1	
225/304	**No Draught Ventilator and Glass Assembly**		1	
225/330	**Hinge Assembly,** for N.D. Ventilator		1	
225/304	**NO DRAUGHT VENTILATOR AND GLASS ASSEMBLY FOR R.H. FRONT DOOR**		1	
225/306	**Glass,** for N.D. Ventilator		1	
225/311	**Glazing Strip,** for N.D. Ventilator		1	
225/336	**Catch Handle,** for N.D. Ventilator		1	

BODY FITTINGS

Part No.	Description	Plate No.	No. per Unit	Remarks
92/646415	**L.H. FRONT DOOR LIGHT FRAME, COMPLETE WITH N.D. VENTILATOR**		1	
225/312	**Rubber Seal,** for Light Frame		1	
225/309	**Felt,** for Glass (Short)		1	
225/310	**Felt,** for Glass (Long)		1	
225/307	**Rubber Seal,** for No Draught Ventilator		1	
225/303	**No Draught Ventilator and Glass Assembly**		1	
225/229	**Hinge Assembly,** for No Draught Ventilator		1	
225/303	**NO DRAUGHT VENTILATOR AND GLASS ASSEMBLY FOR L.H. FRONT DOOR**		1	
225/305	**Glass,** for No Draught Ventilator		1	
225/311	**Glazing Strip,** for No Draught Ventilator		1	
225/335	**Catch Handle,** for No Draught Ventilator		1	
92/636200	**GLASS FOR R.H. FRONT DOOR LIGHT FRAME**		1	
92/626199	**GLASS FOR L.H. FRONT DOOR LIGHT FRAME**		1	
63/636208	**Draught Strip,** for Glasses (Inside)		2	
92/631090	**CHANNEL AT BOTTOM OF R.H. FRONT DOOR GLASSES**		1	
92/631089	**CHANNEL AT BOTTOM OF L.H. FRONT DOOR GLASSES**		1	
51/636111	**RUBBER SEAL IN GLASS CHANNEL**		2	

BODY FITTINGS

Part No.	Description	Plate No.	No. per Unit	Remarks
63/631088	**WINDOW REGULATOR ASSEMBLY FOR R.H. FRONT DOOR**		1	
63/631087	**WINDOW REGULATOR ASSEMBLY FOR L.H. FRONT DOOR**		1	
12104/04	**Screw**, Set, securing Window Regulators to Front Doors		8	
422500/01	**Washer**, Plain, on Setscrews		8	
430241/04	**Washer**, Spring, on Setscrews		8	
51/636242	**HANDLE FOR WINDOW REGULATORS**		2	
51/636245	**Escutcheon**, for Regulator Handles		2	
51/636244	**Locking Pin**, for Handles		2	
53/636062	**HINGE ASSEMBLY FOR R.H. FRONT DOOR**		2	
53/636061	**HINGE ASSEMBLY FOR L.H. FRONT DOOR**		2	
12305/06	**Screw**, Set, securing Hinges to Body		16	
BD.17034/3	**Screw**, Set, securing Hinges to Doors		16	
88003	**Washer**, Spring, on Setscrews		32	
222/350	**CHECK ARM ASSEMBLY FOR FRONT DOORS**		2	
63/611492	**SWIVEL BRACKET FOR R.H. FRONT DOOR CHECK ARM**		1	
63/611491	**SWIVEL BRACKET FOR L.H. FRONT DOOR CHECK ARM**		1	
53/617043	**Screw**, securing Check Arms to Swivel Brackets		4	

BODY FITTINGS

Part No.	Description	Plate No.	No. per Unit	Remarks
86327	**PULL HANDLE FOR FRONT DOORS**		2	
87532/05	Screw, securing Pull Handles		4	
53041	**CASING ASSEMBLY ON R.H. FRONT DOOR**		1	
170169	Armrest Assembly, on R.H. Front Door Casing		1	
BD.711/14	Screw, securing Armrest		4	
BD.541/13	Plain Washer, on Screws		4	
BD.23179	Clip, securing Casing		20	
53040	**CASING ASSEMBLY ON L.H. FRONT DOOR**		1	
170168	Armrest Assembly, on L.H. Front Door Casing		1	
BD.711/14	Screw, securing Armrest		4	
BD.541/13	Washer, Plain, on Screws		4	
BD.23179	Clip, securing Casing		20	
423189/08	Screw, securing Casings to Front Doors		6	
92/636648	**SEALING RUBBER FOR FRONT DOOR HINGE FACE (31" LONG)**		2	
63/636649	**SEALING RUBBER FOR FRONT DOOR (BOTTOM OUTER) (38" LONG)**		2	
63/636637	**SEALING RUBBER FOR FRONT DOOR WAIST (30" LONG)**		2	
51/637051	**BUFFER FOR FRONT DOOR WAIST FENCE PLATES**		4	
92/636632	**FENCE PLATE FOR R.H. FRONT DOOR**		1	
92/636631	**FENCE PLATE FOR L.H. FRONT DOOR**		1	

Part No.	Description	Plate No.	No. per Unit	Remarks
92/632600	DRAUGHT EXCLUDER FOR FRONT DOORS (10 FEET LONG)		2	
63/634692	TREAD PLATE FOR R.H. FRONT DOOR		1	
94/634694	TREAD PLATE EXTENSION FOR R.H. FRONT DOOR		1	
63/634691	TREAD PLATE FOR L.H. FRONT DOOR		1	
94/634693	TREAD PLATE EXTENSION FOR L.H. FRONT DOOR		1	
425269/05	Rivet, Pop, securing Tread Plates (TAP/D/BS/440)		26	
BD.24049	R.H. REAR DOOR—FULLY TRIMMED (COMPLETE WITH ALL FITTINGS)		1	
BD.24048	L.H. REAR DOOR—FULLY TRIMMED (COMPLETE WITH ALL FITTINGS)		1	
BD.24051	R.H. REAR DOOR ASSEMBLY—LESS LOCK AND REMOTE CONTROL		1	
BD.24050	L.H. REAR DOOR ASSEMBLY—LESS LOCK AND REMOTE CONTROL		1	

BODY FITTINGS

Part No.	Description	Plate No.	No. per Unit	Remarks
63/626080	**LOCK AND REMOTE CONTROL FOR R.H. REAR DOOR**		1	
63/626079	**LOCK AND REMOTE CONTROL FOR L.H. REAR DOOR**		1	
423195/33	**Screw**, securing Lock and Remote Controls to Doors		14	
422508/10	**Washer**, Shakeproof, on Screws		14	
51/621052	**STRIKER FOR R.H. REAR DOOR LOCK**		1	
51/621051	**STRIKER FOR L.H. REAR DOOR LOCK**		1	
87513/05	**Screw**, securing Strikers		4	
63/646568	**OUTSIDE HANDLE FOR REAR DOORS**		2	
63/636569	**End Clip**, for Handles		2	
53/637234	**Seating Washer**, for End Clips		2	
63/637233	**Seating Washer**, for Handles		2	
61/636243	**INSIDE HANDLE FOR REAR DOOR LOCKS**		2	
51/636245	**Escutcheon**, for Rear Door Handles		2	
51/636244	**Locking Pin**, for Handles		2	
92/646418	**R.H. REAR DOOR LIGHT FRAME ASSEMBLY**		1	
92/646417	**L.H. REAR DOOR LIGHT FRAME ASSEMBLY**		1	
225/316	**Rubber Seal**, for Glass Frame		2	
225/317	**Felt**, for Glass—(Short)		2	
225/318	**Felt**, for Glass—(Long)		2	

Part No.	Description	Plate No.	No. per Unit	Remarks
92/636202	**GLASS FOR R.H. REAR DOOR LIGHT FRAME**		1	
92/636201	**GLASS FOR L.H. REAR DOOR LIGHT FRAME**		1	
63/636213	**Draught Strip,** for Glasses (Inside)		2	
63/631094	**CHANNEL AT BOTTOM OF R.H. REAR DOOR GLASS**		1	
63/631093	**CHANNEL AT BOTTOM OF L.H. REAR DOOR GLASS**		1	
51/636112	**RUBBER SEAL IN GLASS CHANNELS**		2	
63/631092	**WINDOW REGULATOR ASSEMBLY FOR R.H. REAR DOOR**		1	
63/631091	**WINDOW REGULATOR ASSEMBLY FOR L.H. REAR DOOR**		1	
12104/04	**Screw,** Set, securing Window Regulators to Doors		12	
422500/01	**Washer,** Plain, on Setscrews		12	
430241/04	**Washer,** Spring, on Setscrews		12	
51/636242	**HANDLE FOR WINDOW REGULATOR**		2	
51/636245	**Escutcheon,** for Regulator Handles		2	
51/636244	**Locking Pin,** for Handles		2	
222/106	**HINGE ASSEMBLY (UPPER) FOR R.H. REAR DOOR**		1	
222/114	**HINGE ASSEMBLY (LOWER) FOR R.H. REAR DOOR**		1	

BODY FITTINGS

Part No.	Description	Plate No.	No. per Unit	Remarks
222/105	**HINGE ASSEMBLY (UPPER) FOR L.H. REAR DOOR**		1	
222/113	**HINGE ASSEMBLY (LOWER) FOR L.H. REAR DOOR**		1	
12305/06	Screw, Set, securing Hinges to Body		16	
BD.17034/3	Screw, Set, securing Hinges to Door		16	
222/350	**CHECK ARM ASSEMBLY FOR REAR DOORS**		2	
63/611492	**SWIVEL BRACKET FOR R.H. CHECK ARM**		1	
63/611491	**SWIVEL BRACKET FOR L.H. CHECK ARM**		1	
53/617043	Screw, securing Check Arms to Swivel Brackets		2	
86327	**PULL HANDLE FOR REAR DOORS**		2	
87532/06	Screw, securing Pull Handles to Doors		4	
53047	**CASING ASSEMBLY ON R.H. REAR DOOR**		1	
BD.23179	Clip, retaining Casing to Door		15	
53046	**CASING ASSEMBLY ON L.H. REAR DOOR**		1	
BD.23179	Clip, retaining Casing to Door		15	
423189/08	Screw, securing Casings to Rear Doors		6	
63/636650	**SEALING RUBBER FOR REAR DOOR (BOTTOM OUTER) (28" LONG)**		2	
63/636638	**SEALING RUBBER FOR REAR DOOR WAIST (FENCE SEALING PLATE) (26¼" LONG)**		2	

Part No.	Description	Plate No.	No. per Unit	Remarks
51/637051	**BUFFER FOR REAR DOOR WAIST FENCE PLATE**		4	
92/637262	**BUFFER FOR COURTESY LIGHT SWITCH IN REAR DOORS**		2	
92/636634	**FENCE PLATE FOR REAR DOOR R.H.**		1	
92/636633	**FENCE PLATE FOR REAR DOOR L.H.**		1	
92/632601	**DRAUGHT EXCLUDER FOR REAR DOORS (9′ 6″ LONG)**		2	
94/634696	**TREAD PLATE FOR R.H. REAR DOOR**		1	
94/634695	**TREAD PLATE FOR L.H. REAR DOOR**		1	
425269/05	**Pop Rivet**, securing Tread Plates (TAP/D/BS/440)		20	
	CARPETS			
53211	**Carpet Assembly**, for Front Floor		1	DQ.450 ONLY
53212	**Carpet Assembly**, for Front Floor .		1	DQ.451 ONLY
92/644686	**Carpet Assembly**, for Intermediate Floor		1	
92/644142	**Carpet Assembly**, for Rear Floor		1	
170659	**Carpet**, for R.H. Rear Sill		1	
170658	**Carpet**, for L.H. Rear Sill		1	
92/644143	**Carpet**, for Rear Seat Heelboard		1	
92/634202	**RUBBER RETAINER, HOLDING CARPETS AT FRONT DOOR SILLS**		2	
63/634467	**Fixing Strip**, securing Carpet Retainer at Front Door Sills		2	
425269/05	**Pop Rivet**, securing Fixing Strips (TAP/D/BS/440)		20	

BODY FITTINGS

Part No.	Description	Plate No.	No. per Unit	Remarks
92/634203	**RUBBER RETAINER HOLDING CARPETS AT REAR DOOR SILLS**		2	
63/634468	**Fixing Strap,** securing Carpet Retainer at Rear Door Sills		2	
425269/05	**Pop Rivet,** securing Fixing Strips (TAP/D/BS/440)		16	
53231	**RUG (NYLON) FOR REAR FLOOR**		1	
94/644439	**UNDERFELT FOR FRONT FLOOR AND GEARBOX**		1	
	BODY INSULATION FLINTKOTE REF. No. 109B			
94/634318	**Flintkote,** for Centre Front Floor		1	
94/636360	**Flintkote,** for Inner Facing Sills, Front Doors		2	
94/636361	**Flintkote,** for Inner Top, Front Doors		2	
94/636362	**Flintkote,** for Inner Bottom, Front Doors		2	
94/636363	**Flintkote,** for Inner Centre, Front Doors		2	
94/636365	**Flintkote,** for Inner Top, Rear Doors		2	
94/636367	**Flintkote,** for Inner Facing Sill, Rear Doors		2	
94/636368	**Flintkote,** for Inner Bottom Rear Doors		2	
94/634375	**Flintkote,** for Rear Floor		1	
94/634373	**Flintkote,** for Toeboards		2	
94/634315	**Flintkote,** for Front Floors		2	
94/634374	**Flintkote,** for Front Sills		2	
	BODY INSULATION—HARDURA			
94/634378	**Hardura,** for R.H. Toeboard		1	**R.H. DRIVE CARS ONLY**
94/634377	**Hardura,** for L.H. Toeboard		1	
95/634378	**Hardura,** for R.H. Toeboard		1	**L.H. DRIVE CARS ONLY**
95/634377	**Hardura,** for R.H. Toeboard		1	
94/634379	**Hardura,** for Gearbox Cover		1	
	BODY INSULATION RUBBERISED FELT ¼" THICK			
92/634884	**Rubberised Felt,** for Rear Floor		1	
94/632310	**Rubberised Felt,** for R.H. Wheel Arch		1	
94/632309	**Rubberised Felt,** for L.H. Wheel Arch		1	
94/634371	**Rubberised Felt,** for R.H. Boot Floor		1	
94/634370	**Rubberised Felt,** for L.H. Boot Floor		1	
94/634382	**Rubberised Felt,** for R.H. Sill Front Floor		1	
94/634381	**Rubberised Felt,** for L.H. Sill Front Floor		1	
94/634385	**Rubberised Felt,** for R.H. Front Floor		1	
94/634384	**Rubberised Felt,** for L.H. Front Floor		1	

Part No.	Description	Plate No.	No. per Unit	Remarks
	BODY INSULATION RUBBERISED FELT ½" THICK			
94/634386	**Rubberised Felt,** for Gearbox Cover		1	
94/634389	**Rubberised Felt,** for R.H. Toeboard		1	R.H. DRIVE CARS ONLY
94/634388	**Rubberised Felt,** for L.H. Toeboard		1	
95/634389	**Rubberised Felt,** for R.H. Toeboard		1	L.H. DRIVE CARS ONLY
95/634388	**Rubberised Felt,** for L.H. Toeboard		1	
	CARPETS NON-FELTED			
92/636184	**Carpet,** for R.H. Front Door Casings		1	
92/636183	**Carpet,** for L.H. Front Door Casing		1	
92/636182	**Carpet,** for R.H. Rear Door Casing		1	
92/636181	**Carpet,** for L.H. Rear Door Casing		1	
92/635118	**Carpet,** for R.H. Dash Side		1	R.H. DRIVE CARS ONLY
92/635117	**Carpet,** for L.H. Dash Side		1	
93/635118	**Carpet,** for R.H. Dash Side		1	L.H. DRRIVE CARS ONLY
93/635117	**Carpet,** for L.H. Dash Side		1	
92/634137	**Carpet,** for Heelboard for Rear Seat		1	
92/634752	**Carpet,** for Intermediate Floor		1	
92/634885	**Carpet,** for back of Front Seat Squab		1	
	SEALING RUBBERS			
92/636648	**Sealing Rubber,** for Front Door Hinge Faces (30" Long)		2	
63/636649	**Sealing Rubber,** for Front Door Outer Bottom (38" Long)		2	
63/636637	**Sealing Rubber,** for Front Door Waist (30" Long)		2	
63/636650	**Sealing Rubber,** for Rear Door Outer Bottoms (28" Long)		2	
63/636638	**Sealing Rubber,** for Rear Door Waist (24½" Long)		2	
92/635378	**Sealing Rubber,** for Windscreen Glasses		2	
225/312	**Sealing Rubber,** for Windscreen Glasses (Filler)		2	
225/308	**Sealing Rubber,** for Front Door Vent Light, R.H.		1	
225/307	**Sealing Rubber,** for Front Door Vent Light, L.H.		1	
225/311	**Sealing Rubber,** for Front Door Vents (Glazing)		2	
225/316	**Sealing Rubber,** for Rear Door Glass Frames		2	
93/632883	**Sealing Rubber,** for Rear Quarter No Draught Ventilators, Bottom		2	
63/632884	**Sealing Rubber,** for Rear Quarter No Draught Ventilators, Front		2	
63/632885	**Sealing Rubber,** for Rear Quarter No Draught Ventilators, Top		2	
225/324	**Sealing Rubber,** for Rear Quarter No Draught Ventilator Frame, R.H.		1	
225/323	**Sealing Rubber,** for Rear Quarter No Draught Ventilator Frame, L.H.		1	
225/327	**Sealing Rubber,** for Rear Quarter No Draught Ventilator (Glazing)		2	
92/631760	**Sealing Rubber,** for Backlight (Glazing)		1	
92/631761	**Sealing Rubber,** for Backlight (Filler)		1	
92/632598	**Sealing Rubber,** for Trunk Opening		1	
63/635392	**Sealing Rubber,** for Front Wings		2	
92/659209	**Sealing Rubber,** for Valances		2	
92/659210	**Sealing Rubber,** for Bonnet		2	

BODY FITTINGS

Part No.	Description	Plate No.	No. per Unit	Remarks
	BODY MOUNTINGS			
11106/12	**Bolt,** Body Mounting Point No. 1 (Inner and Intermediate)		4	
11106/24	**Bolt,** Body Mounting Point No. 1 (Outer)		2	**ALTERNATIVES**
11106/22	**Bolt,** Body Mounting Point No. 1 (Outer)		2	
11106/14	**Bolt,** Body Mounting Point No. 2 (Outer)		2	
12206/10	**Screw,** Set, Body Mounting Point No. 2 (Inner)		2	
11106/18	**Bolt,** Body Mounting Point No. 3 (Outer)		2	
12206/11	**Screw,** Set, Body Mounting Point No. 3 (Centre)		2	
12206/10	**Screw,** Set, Body Mounting Point No. 3 (Inner)		2	
12106/11	**Screw,** Set, Body Mounting Points No. 4 and No. 6		4	
12206/12	**Screw,** Set, Body Mounting Point No. 5		2	**ALTERNATIVES**
12206/16	**Screw,** Set, Body Mounting Point No. 5		2	
12106/10	**Screw,** Set, Dash Panel Mounting Bracket		2	
422500/03	**Washer,** Body Mounting Points		16	
423432	**Nut,** on Bolts		16	
401650	**Pad,** on Mountings (TYRPROD)		As req'd	
423416	**Pad,** on Mountings (TYRPROD)		6	
265809	**Locating Washer**		26	
400994	**Locating Washer,** (Rubber)		26	

Part No.	Description	Plate No.	No. per Unit	Remarks
134811	**FRONT BUMPER ASSEMBLY (0/3290)**		1	
134810	**Bumper Bar Assembly** (0/3285)		1	
308688	**Spring (Leaf)** supporting Bumper (0/4828)		2	
1447	**Over-rider** (0/2249)		2	
209	**Over-rider Moulding** (RS.66/1)		4	
133396/02	**Nut,** securing Bumper Bar and Over-rider to Spring (RS.11/12)		2	
133396/03	**Washer,** Plain, under Nuts (RS.14/101)		2	
134647/01	**Washer,** Spring, under Nuts (RS.12/46)		2	
308498	**BRACKET R.H. SECURING FRONT BUMPER TO FRAME**		1	
308499	**BRACKET L.H. SECURING FRONT BUMPER TO FRAME**		1	
431164	**Packing Piece**		As req'd	
11106/08	**Bolt,** securing Bracket to Frame		4	
422514/07	**Nut,** Nyloc, on Bolts		4	
11106/09	**Bolt,** securing Bumper to Bracket		4	
422514/07	**Nut,** Nyloc, on Bolts		4	
422500/03	**Washer,** Plain, under Nuts		4	
11106/12	**Bolt,** securing Bumper to Bracket		4	**USED WHEN 3 OFF PACKING PIECE, PART No. 431164 ARE FITTED**
305756	**BRACKET, FOR FOG AND LONG RANGE DRIVING LAMP**		1	
11105/06	**Bolt,** securing Bracket to Bumper Spring		4	
13105	**Nut,** on Bolts		4	
430241/05	**Washer,** Spring, under Nuts		4	
304842	**SUPPORT FOR FRONT NUMBER PLATE**		1	
426315	**Packing Piece**		3	
12304/09	**Screw,** Set, securing Support		3	
13104	**Nut,** on Setscrews		3	
423654	**Washer,** Plain, on Setscrews		3	
430241/04	**Washer,** Spring, under Nuts		3	
92/659030	**PLINTH BEHIND FRONT BUMPER**		1	

BODY FITTINGS

Part No.	Description	Plate No.	No. per Unit	Remarks
26247	**RADIATOR GRILLE AND SURROUND**		1	
26199	**Radiator Surround Assembly**		1	
26203	**R.H. Grille Assembly**		1	
26204	**L.H. Grille Assembly**		1	
26199	**RADIATOR SURROUND ASSEMBLY**		1	
430779	**Fixing Bracket,** R.H. side, for Grille		1	
430780	**Fixing Bracket,** L.H. side, for Grille		1	
430769	**Cover,** over Starting Handle Hole		1	
92/659209	**RUBBER SEAL FOR VALANCE**		2	
425269/05	**Rivet,** securing Seal (TAP/D/BS/440)		4	
426087/02	**Cup,** Brass, on Rivets		4	
423199/5	**Washer,** Plain, on Rivets		4	
63/635392	**RUBBER SEAL FOR FRONT WING**		2	
92/659210	**RUBBER SEAL FOR BONNET**		1	
425269/05	**Rivet,** securing Seal (TAP/D/BS/440)		8	
423199/05	**Washer,** Plain, on Rivets		8	
92/669205	**BONNET HINGE ASSEMBLY**		2	
11104/06	**Bolt,** securing Hinge to Bonnet		8	
430241/04	**Washer,** Spring, on Bolts		8	
11105/06	**Bolt,** securing Hinge to Bulkhead		8	
422500/02	**Washer,** Plain, on Bolts		8	
430241/05	**Washer,** Spring, on Bolts		8	
92/669204	**BONNET LOCK STRIKER ASSEMBLY**		1	
13104	**Nut,** securing Striker Assembly to Bonnet		4	
422500/01	**Washer,** Plain, under Nuts		4	
430241/04	**Washer,** Spring, under Nuts		4	

Part No.	Description	Plate No.	No. per Unit	Remarks
92/669200	**SUPPORT ASSEMBLY FOR BONNET LOCK STRIKER PLATE**		1	
94/659052	**Bracket** for Bonnet Catch Support		1	
12104/04	**Screw,** Set, securing Bracket to Fan Cowl		2	
13104	**Nut** on Setscrews		2	
430241/04	**Washer,** Spring, under Nuts		2	
92/659202	**STRIKER PLATE FOR BONNET LOCK (INNER SLIDE)**		1	
92/669201	**STRIKER PLATE ASSEMBLY (INNER) FOR BONNET LOCK**		1	
11104/08	**Screw,** Set, securing Inner Slide and Striker Plate to Support Plate		2	
430241/04	**Washer,** Spring, on Setscrews		2	
92/659203	**Spring,** retaining Striker Plate		1	
304742	**SAFETY CATCH FOR BONNET**		1	
11104/04	**Screw,** Set, securing Safety Catch to Bonnet		2	
13104	**Nut,** on Setscrews		2	
422500/01	**Washer,** Plain, on Setscrews		2	
430241/04	**Washer,** Spring, under Nuts		2	
308204/01	**CONTROL CABLE ASSEMBLY FOR BONNET LOCK**		1	
431621	**Handle,** on Control Cable		1	
431622	**Grubscrew,** securing Handle to Control Cable		1	
92/659145	**RUBBER BUFFER FOR BONNET**		2	
C.4691	**INDICATOR ON SIDELAMP CASING**		2	
C.4098/2	**Clip,** securing Indicator to Casing		2	
431597	**SEALING WASHER FOR SIDELAMP**		2	

BODY FITTINGS

Part No.	Description	Plate No.	No. per Unit	Remarks
92/641105	**GRILLE FOR PLENUM CHAMBER**		1	
221/060	**Clip** (Large), securing Grille		2	
221/061	**Clip**, (Small), securing Grille		6	
425285/02	**Screw**, securing Grille to Bulkhead		4	
92/641106	**LATTICE FOR PLENUM CHAMBER**		1	
94/635103	**PLENUM CHAMBER TUBE**		1	
423176/15	**Clip**, for Plenum Tube		1	
432456	**Clip**, securing Plenum Tube to Dash		1	
423187/23	**Screw**, securing Clip		1	
170905	**WINDSCREEN GLASS (ZONE TOUGHENED)**		1	**R.H. DRIVE CARS ONLY**
170906	**WINDSCREEN GLASS (ZONE TOUGHENED)**		1	**L.H. DRIVE CARS ONLY**
92/675130	**WINDSCREEN GLASS (LAMINATED)**		1	**ALTERNATIVE TO PART Nos. 170905 and 170906.**
92/635378	**RUBBER SEAL FOR WINDSCREEN GLASS**		1	
92/635379	**RUBBER FILLER STRIP FOR WIND-SCREEN**		1	

BODY FITTINGS

Part No.	Description	Plate No.	No. per Unit	Remarks
92/631484	**CHROME FRAME FINISHER FOR R.H. SIDE OF WINDSCREEN**		1	
92/631483	**CHROME FRAME FINISHER FOR L.H. SIDE OF WINDSCREEN**		1	
92/637178	**JOINTING PIECE AT CENTRE OF CHROME FRAME FINISHERS**		2	
BD.18645	**R.H. SUN VISOR ASSEMBLY**		1	**PLEASE STATE WHETHER HEAD-CLOTH OR PLASTIC WHEN ORDERING**
BD.18644	**L.H. SUN VISOR ASSEMBLY**		1	
BD.18678	**Friction Pivot Assembly**		2	
BD.18678	**FRICTION PIVOT ASSEMBLY**		2	
BD.18647	**Friction Cover Assembly**		2	
BD.17713	**Base,** for Friction Arms		2	
BD.9635	**Spring,** on Friction Arms		2	
BD.541/32	**Washer,** Special, on Friction Arms		4	
C.8667/1	**Nut,** Self-Locking, securing Friction Arms		2	
C.2017/1	**Packing,** for Sun Visors		6	
87531/10	**Screw,** Set, securing Sun Visors		6	
63/641799	**INTERIOR DRIVING MIRROR**		1	
423190/30	**Screw,** (Chrome), securing Mirror to Roof		2	
426087/06	**Cup,** (Chrome) on Screws		2	
308643	**STAY (LONG) SECURING STEERING COLUMN TO DASH**		1	
308644	**STAY (SHORT) SECURING STEERING COLUMN DASH**		1	**R.H. DRIVE CARS ONLY**

BODY FITTINGS

Part No.	Description	Plate No.	No. per Unit	Remarks
308774	**STAY (SHORT) SECURING STEERING COLUMN TO DASH**		1	**L.H. DRIVE CARS ONLY**
433068	**Distance Piece,** between Short Stay and Dash		1	Fitted from Chassis No. 136011 to 136144 **DR.450 ONLY**
12105/10	**Screw,** Set, securing Short Stay to Dash		1	
12105/06	**Screw,** Set, securing Short Stay to Dash		1	Fitted to Chassis No. 136145 and subs. **DR.450 ONLY**
13105	**Nut,** on Setscrew		1	
423654	**Washer,** Plain, under Nut			
424765	**Blanking Plug,** for Redundant Stay Hole		1	
12105/06	**Screw,** Set, securing Short Stay to Dash		1	**DR.451 ONLY**
422500/02	**Washer,** Plain, on Setscrew		1	
430241/05	**Washer,** Spring, on Setscrew		1	
13104	**Nut,** securing Long Stay to Handbrake Attachment Plate Fixing Bolt		1	
422500/01	**Washer,** Plain, on Fixing Bolt		2	
430241/04	**Washer,** Spring, under Nut		1	
11105/32	**Bolt,** securing Stays to Steering Column		1	
13105	**Nut,** on Bolt		1	
422500/02	**Washer,** Plain, on Bolt		2	
430241/05	**Washer,** Spring, under Nut		1	
92/635247	**ATTACHMENT PLATE ASSEMBLY FOR HANDBRAKE LEVER**		1	**R.H. DRIVE CARS ONLY**
93/635247	**ATTACHMENT PLATE ASSEMBLY FOR HANDBRAKE LEVER**		1	**L.H. DRIVE CARS ONLY**
92/645246	**ABUTMENT BRACKET FOR HAND-BRAKE CABLE**		1	**R.H. DRIVE CARS ONLY**
93/645246	**ABUTMENT BRACKET FOR HAND-BRAKE CABLE**		1	**L.H. DRIVE CARS ONLY**
12105/06	**Screw,** Set, securing Handbrake Lever Assembly to Attachment Plate		2	
13105	**Nut,** on Setscrews		2	
422500/02	**Washer,** Plain, on Setscrews		2	
430241/05	**Washer,** Spring, under Nuts		2	
12104/10	**Screw,** Set, securing Attachment Plate, Abutment Bracket and Steering Column Stay to Dash		1	
12104/06	**Screw,** Set, securing Attachment Plate and Abutment Bracket to Dash		2	
12104/06	**Screw,** Set, securing Attachment Plate to Dash		2	
13104	**Nut,** on Setscrews		5	
422500/01	**Washer,** Plain, on Setscrews		7	
430241/04	**Washer,** Spring, under Nuts		5	

Part No.	Description	Plate No.	No. per Unit	Remarks
308593	DRAUGHT EXCLUDER ON STEERING COLUMN		1	
278726	FERRULE IN DRAUGHT EXCLUDER		1	
432139	SUPPORT PLATE ASSEMBLY BEHIND DRAUGHT EXCLUDER		1	
53126	SCUTTLE TOP CASING ASSEMBLY		1	R.H. DRIVE CARS ONLY
53137	SCUTTLE TOP CASING ASSEMBLY		1	L.H. DRIVE CARS ONLY
423187/09	Screw, securing Top Casings to Body		16	
170432	R.H. SIDE CASING FOR DASH		1	
170431	L.H. SIDE CASING FOR DASH		1	
53283	R.H. FRONT SEAT CUSHION ASSEMBLY COMPLETE		1	
53282	L.H. FRONT SEAT CUSHION ASSEMBLY COMPLETE		1	
53280	FRONT SEAT SQUAB ASSEMBLY		1	
423175/13	Screw, Wood, securing Front Squab to Division Board		3	

BODY FITTINGS

Part No.	Description	Plate No.	No. per Unit	Remarks
53277	**FRONT COMPARTMENT ROOF LINING ASSEMBLY**		1	
170739	**Front Listing Rail**		1	
53278	**Headcloth,** for Front Compartment		1	
423187/08	**Screw,** (P.K.) securing Listing Rail		4	
53271	**REAR COMPARTMENT ROOF LINING ASSEMBLY (FRONT PANEL)**		1	
53273	**Headcloth only**		1	
53274	**REAR COMPARTMENT ROOF LINING ASSEMBLY (REAR PANEL)**		1	
53276	**Headcloth only**		1	
170735	**REAR ROOF BOW ASSEMBLY**		1	
170736	**Headcloth only**		1	
12704/06	**Screw,** set, securing Rear Roof Bow		4	
94/645377	**FACIA PANEL ASSEMBLY**		1	**R.H. DRIVE CARS ONLY**
95/645377	**FACIA PANEL ASSEMBLY**		1	**L.H. DRIVE CARS ONLY**
92/647215	**ASHTRAY ASSEMBLY IN FACIA**		1	
94/635423	**FRONT PANEL FOR ASHTRAY**		1	
53/645133	**LOCK FOR CUBBY BOX LID**		1	
170661	**WINDSCREEN HEADER CAPPING R.H.**		1	
170660	**WINDSCREEN HEADER CAPPING L.H.**		1	
423190/05	**Screw,** (Chrome), securing Header Capping to Roof		4	
426088/01	**Cup,** (Chrome), on Screws		4	
470074	**Joint Cover,** (Chrome), at centre of Header Cappings		1	
87102/04	**Screw,** Wood, securing Joint Cover		1	

BODY FITTINGS

Part No.	Description	Plate No.	No per Unit	Remarks
170663	**CAPPING FOR R.H. 'A' POST**		1	
170662	**CAPPING FOR L.H. 'A' POST**		1	
423190/11	**Screw** (Chrome), securing Cappings		2	
170665	**R.H. CANTRAIL CAPPING (FRONT)**		1	
170664	**L.H. CANTRAIL CAPPING (FRONT)**		1	
90017/08	**Screw**, (P.K.), securing Cappings to Cantrail		6	
426088/01	**Cup**, (Chrome), on Screws		6	
470212	**Joint Cover**, (Chrome), for R.H. Capping		1	
470211	**Joint Cover**, (Chrome), for L.H. Capping		1	
87102/04	**Screw**, Wood, securing Covers to Cappings		4	
170667	**R.H. CANTRAIL CAPPING (REAR)**		1	
170666	**L.H. CANTRAIL CAPPING (REAR)**		1	
170678	**TOP CAPPING FOR R.H. FRONT DOOR**		1	
170677	**TOP CAPPING FOR L.H. FRONT DOOR**		1	
423190/05	**Screw**, (Chrome), securing Cappings		8	
426088/01	**Cup**, (Chrome), on Screws		8	
170676	**WAIST CAPPING FOR R.H. FRONT DOOR**		1	
170675	**WAIST CAPPING FOR L.H. FRONT DOOR**		1	
423190/05	**Screw**, (P.K.), securing Cappings to Doors		4	
170674	**WAIST CAPPING ON DIVISION**		1	
423175/27	**Screw**, Wood, securing Waist Capping to Division		3	

BODY FITTINGS

Part No.	Description	Plate No.	No per Unit	Remarks
170682	**TOP CAPPING FOR R.H. REAR DOOR**		1	
170681	**TOP CAPPING FOR L.H. REAR DOOR**		1	
423192/05	Screw, (Chrome), securing Cappings		8	
426088/01	Cup, (Chrome), on Screws		8	
170680	**WAIST CAPPING FOR R.H. REAR DOOR**		1	
170679	**WAIST CAPPING FOR L.H. REAR DOOR**		1	
423189/15	Screw, securing Waist Cappings to Doors		4	
170673	**CAPPING FOR R.H. 'D' POST**		1	
170672	**CAPPING FOR L.H. 'D' POST**		1	
423189/13	Screw, (P.K.), securing Cappings to 'D' Post		4	
170669	**TOP CAPPING FOR R.H. REAR QUARTER**		1	
170668	**TOP CAPPING FOR L.H. REAR QUARTER**		1	
170671	**REAR CAPPING FOR R.H. REAR QUARTER**		1	
170670	**REAR CAPPING FOR L.H. REAR QUARTER**		1	
90017/08	Screw, (P.K.), securing Rear Quarter Cappings to Body		22	

Part No.	Description	Plate No.	No. per Unit	Remarks
170686	**WAIST CAPPING, UPPER, FOR R.H. REAR QUARTER**		1	
170685	**WAIST CAPPING, UPPER, FOR L.H. REAR QUARTER**		1	
423190/05	**Screw,** (Chrome), securing Top Cappings to Body		8	
426088/01	**Cup,** (Chrome), on Screws		8	
BD.25468	**WAIST CAPPING, LOWER, FOR R.H. REAR QUARTER**		1	
170790	**WAIST CAPPING, LOWER, FOR L.H. REAR QUARTER**		1	Fitted from Chassis No. 136011 to 136277
BD.25467	**WAIST CAPPING, LOWER, FOR L.H. REAR QUARTER**		1	Fitted to Chassis No. 136278 and subs.
423189/03	**Screw,** securing Waist Cappings to Body		4	
53188	**DIVISION TOP PANEL ASSEMBLY**		1	
12104/06	**Screw,** Set, securing Division Top to Cantrail		4	
422500/01	**Washer,** Plain, on Setscrews		4	
430241/04	**Washer,** Spring, on Setscrews		4	
12105/06	**Screw,** Set, securing Division Top to ' B.C. ' Posts		4	
422500/02	**Washer,** Plain, on Setscrews		4	
430241/05	**Washer,** Spring, on Setscrews		4	
53267	**R.H. SIDE PANEL FOR DIVISION**		1	
53266	**L.H. SIDE PANEL FOR DIVISION**		1	
87109/08	**Screw,** Wood, securing Side Panels to Seat Support		4	
87109/12	**Screw,** Wood, securing Side Panels to Filler		2	
87109/08	**Screw,** Wood, securing Side Panel to Filler		6	

BODY FITTINGS

Part No.	Description	Plate No.	No. per Unit	Remarks
53269	**FILLER, LOWER, ON R.H. 'B.C.' POST**		1	
53268	**FILLER, LOWER, ON L.H. 'B.C.' POST**		1	
470178	**Bracket**, securing Fillers to Floor		2	
87108/06	**Screw**, Wood, securing Bracket to Floor		4	
423187/09	**Screw**, securing Filler to Floor		2	
423189/31	**Screw**, securing Filler to 'B.C.' Post		2	
170754	**TRIM PANEL ASSEMBLY AT FRONT OF DIVISION TOP RAIL**		1	
423189/03	**Screw**, securing Trim Assembly to Body		13	
170756	**TRIM PANEL ASSEMBLY, AT REAR OF DIVISION TOP RAIL**		1	
170759	**TRIM PANEL, FRONT UPPER, ON R.H. 'B.C.' POST**		1	
170758	**TRIM PANEL, FRONT UPPER, ON L.H. 'B.C.' POST**		1	
170752	**TRIM PANEL, REAR UPPER, ON R.H. 'B.C.' POST**		1	
170751	**TRIM PANEL, REAR UPPER, ON L.H. 'B.C.' POST**		1	
423189/03	**Screw**, securing Front Trim Panels		4	
423190/06	**Screw**, securing Rear Trim Panels		2	
170558	**GLASS IN DIVISION**		2	

Part No.	Description	Plate No.	No. per Unit	Remarks
370404	**CHANNEL AT TOP OF GLASS**		2	
370406	**CHANNEL AT SIDES OF GLASS**		4	
370405	**CHANNEL AT BOTTOM OF GLASS**		2	
423189/04	**Screw,** securing Glass Channels		36	
BD.25174	**DIVISION BOTTOM TRIM PANEL ASSEMBLY**		1	
423175/12	**Screw,** Wood, securing Panel Assembly to sides of Division		10	
423195/33	**Screw,** Set, securing Panel Assembly to Waist Rail		7	
423175/22	**Screw,** Wood, securing Panel Assembly to Seat Support		17	
423175/22	**Screw,** Wood, securing Panel Assembly to Sides at Division		6	
BD.21926	**ASHTRAY IN DIVISION**		1	
423187/24	**Screw,** Wood, securing Ashtray to Division		3	
370363	**GRAB HANDLE, ON DIVISION WAIST CAPPING**		2	
13106	**Nut,** securing Grab Handles		4	
430241/06	**Washer,** Spring, under Nuts		4	
53405	**OCCASIONAL SEAT, COMPLETE**		2	Fitted from Chassis No. 136011 to 136277
BD.25487	**OCCASIONAL SEAT, COMPLETE**		2	Fitted to Chassis No. 136278 and subs.
470146	**Pivot Bolt,** (Side), securing Seat to Floor		2	
460145	**Pivot Bolt,** (Centre), securing Seat to Floor		1	
13106	**Nut,** on Centre Pivot Bolt		1	
422500/05	**Washer,** Plain, on Pivot Bolts		6	
430241/06	**Washer,** Spring, on Pivot Bolts		3	

BODY FITTINGS

Part No.	Description	Plate No.	No. per Unit	Remarks
170997	**TRIM PANEL ASSEMBLY FOR BOTTOM OF OCCASIONAL SEATS**		2	
87100/06	**Screw,** Wood, securing Trim Panels to Seat		8	
87532/04	**Screw,** Set, (Chrome) securing Trim Panels to Seats		4	
426087/06	**Cup,** (Chrome), on Setscrews		4	
422543/02	**Nut,** on Setscrews		4	
423199/02	**Washer,** Plain, under Nuts		4	
BD.25463	**FOOT REST ASSEMBLY, FOR REAR SEAT PASSENGERS**		2	Fitted to Chassis No. 136278 and subs.
BD.1500/2	**Screw,** Wood, securing Foot Rests to Occasional Seats		8	
53313	**REAR SEAT CUSHION ASSEMBLY**		1	Fitted from Chassis No. 136011 to 136188
BD.24496	**REAR SEAT CUSHION ASSEMBLY**		1	Fitted to Chassis No. 136189 and subs.
53339	**REAR SEAT SQUAB ASSEMBLY**		1	
170859	**ARMREST ASSEMBLY FOR REAR SEAT**		1	
370363	**GRAB HANDLE ON 'D' POST**		2	
13106	**Nut,** securing Grab Handles to 'D' Posts		4	
430241/06	**Washer,** Spring, under Nuts		4	
BD.24583	**TRIM CASING FOR R.H. REAR QUARTER**		1	
BD.24582	**TRIM CASING FOR L.H. REAR QUARTER**		1	

Part No.	Description	Plate No.	No. per Unit	Remarks
53298	**ARMREST ASSEMBLY FOR R.H. REAR QUARTER**		1	
53297	**ARMREST ASSEMBLY FOR L.H. REAR QUARTER**		1	
BD.21926	**ASHTRAY FOR REAR QUARTERS**		2	
170781	**POCKET ASSEMBLY FOR REAR QUARTERS**		2	
170726	**UPPER TRIM PANEL FOR R.H. REAR QUARTER**		1	
170725	**UPPER TRIM PANEL FOR L.H. REAR QUARTER**		1	
53237	**NO DRAUGHT VENTILATOR ASSEMBLY IN R.H. REAR QUARTER**		1	
170650	Glass only		1	
370361	Everseal Strip, for Frame		1	
370362	Everseal Strip, for Hinge Pillar		1	
BD.20468	**CATCH OPERATING R.H. VENTILATOR**		1	
53236	**NO DRAUGHT VENTILATOR ASSEMBLY IN L.H. REAR QUARTER**		1	
170650	Glass only		1	
370361	Everseal Strip for Frame		1	
370362	Everseal Strip for Hinge Pillar		1	

BODY FITTINGS

Part No.	Description	Plate No.	No. per Unit	Remarks
BD.20467	CATCH OPERATING L.H. VENTILATOR		1	
81/637046	SEALING RUBBER ON 'D' POST FOR REAR QUARTER NO DRAUGHT VENTILATOR		2	
BD.23375	SEALING RUBBER FOR REAR QUARTER NO DRAUGHT VENTILATOR SURROUND		2	
63/633347	BACKLIGHT GLASS, TOUGHENED		1	
92/633125	BACKLIGHT GLASS, LAMINATED		1	ALTERNATIVE TO 63/633347
92/631760	RUBBER SEAL (GLAZING) FOR BACKLIGHT		1	
92/631761	FILLER STRIP FOR BACKLIGHT SEAL		1	
92/631486	BACKLIGHT R.H. FINISHER		1	
92/631485	BACKLIGHT L.H. FINISHER		1	
92/637178	COVER PLATE FOR FINISHER JOINT		2	

Part No.	Description	Plate No.	No. per Unit	Remarks
170731	**BACKLIGHT INTERIOR SURROUND**		1	
BD.23179	**Clip,** securing Surround to Body		31	
BD.25372	**HINGE ASSEMBLY FOR TRUNK LID**		2	
63/626773	**Packing Piece,** for Trunk Lid Hinge		As req'd	
12105/06	**Screw,** Set, securing Hinges to Lid		8	
422500/02	**Washer,** Plain, on Setscrews		8	
422508/22	**Washer,** Shakeproof, on Setscrews		8	
12104/04	**Screw,** Set, securing Hinges to Body		8	
422500/01	**Washer,** Plain, on Setscrews		8	
422508/15	**Washer,** Shakeproof, on Setscrews		8	
94/632598	**RUBBER SEAL FOR TRUNK OPENING**		1	
92/659145	**RUBBER BUFFER FOR TRUNK LID**		2	
63/636602	**CENTRE MOTIF FOR TRUNK LID**		1	
63/636671	**Attachment Angle,** for Centre Motif		1	
63/636604	**R.H. SIDE MOTIF FOR TRUNK LID**		1	
63/636603	**L.H. SIDE MOTIF FOR TRUNK LID**		1	
63/636611	**SEALING PAD FOR TRUNK LID MOTIF**		1	
87623/04	**Screw,** Set, securing Side Motifs to Centre Motif		6	
430241/03	**Washer,** Spring, on Setscrews		6	
423195/34	**Screw,** Set, securing Motifs to Trunk Lid		10	
422543/2	**Nut,** on Setscrews		4	
430241/03	**Washer,** Spring, on Setscrews		10	
90025/02	**Screw,** securing Motif to Angle Attachment		1	
423187/02	**Screw,** securing Angle Attachment to Trunk Lid		3	

BODY FITTINGS

Part No.	Description	Plate No.	No. per Unit	Remarks
63/641385	**LOCKING BARREL FOR TRUNK LID**		1	
63/641255	**LOCK ASSEMBLY FOR TRUNK LID**		1	
222/236	**Striker Plate,** for Trunk Lid		1	
63/632876	**Packing Piece,** for Striker Plate		As req'd	
87623/03	**Screw,** Set, securing Lock to Bracket and Trunk Lid		2	
87623/04	**Screw,** Set, securing Lock to Bracket and Trunk Lid		2	
422543/2	**Nut,** on Setscrews		2	
423199/02	**Washer,** Plain, on Setscrews		4	
430241/03	**Washer,** Spring, on Setscrews		4	
11104/10	**Screw,** Set, securing Trunk Lock Striker Plate to Body		2	
13104	**Nut,** on Setscrews		2	
422500/01	**Washer,** Plain, on Setscrews		2	
430241/04	**Washer,** Spring, under Nuts		2	
63/646605	**BRACKET FOR REAR NUMBER PLATE LAMP**		1	
308702	**BATTERY CRADLE ASSEMBLY**		1	
432257	**Rubber,** for Battery Cradle Assembly		2	
432258/01	**Rubber,** for Battery Cradle Assembly		1	
432258/02	**Rubber,** for Battery Cradle Assembly		2	
432258/03	**Rubber,** for Battery Cradle Assembly		1	
432258/04	**Rubber,** for Battery Cradle Assembly		1	
308695	**ANGLE ASSEMBLY SECURING BATTERY**		1	
422542/11	**Rod,** securing Battery		2	
13204	**Nut,** securing Rods		2	
88602	**Nut,** Wing, on Rods		2	
422500/01	**Washer,** Plain, under Wing Nuts		2	
53221	**BATTERY BOX COVER ASSEMBLY**		1	Fitted from Chassis No. 136011 to 136277
BD.25622	**BATTERY BOX COVER ASSEMBLY**		1	Fitted to Chassis No. 136278 and subs.

BODY FITTINGS

Part No.	Description	Plate No.	No. per Unit	Remarks
370313	**LID ASSEMBLY FOR BATTERY BOX**		1	
170549	**SPARE WHEEL COVER ASSEMBLY**		1	Fitted from Chassis No. 136011 to 136249
BD.24157	**SPARE WHEEL COVER ASSEMBLY**		1	Fitted to Chassis No. 136250 and subs.
51/647143	**Turn Button Assembly,** securing Spare Wheel Cover to Luggage Floor		2	
428189/05	**Screw,** securing Turnbuttons to Luggage Floor		6	
94/641839	**TOP STRAP ASSEMBLY FOR PETROL TANK**		2	
94/641840	**REAR STRAP ASSEMBLY FOR PETROL TANK**		2	
11105/05	**Bolt,** securing Top Strap to Body		2	
11105/07	**Bolt,** securing Rear Strap to Body		2	
11105/07	**Bolt,** securing Top Strap to Rear Strap		2	
430241/05	**Washer,** Spring, on Bolts		6	
75/637438	**SEAL RING FOR PETROL TANK (BOTTOM)**		1	
136326	**REAR BUMPER ASSEMBLY (0/4831)**		1	
136293	**Bumper Bar Assembly** (0/4818)		1	
308357	**Spring,** (Leaf), supporting Bumper (0/4819)		2	
133396/02	**Nut,** securing Bumper Bar to Spring (RS.11/12)		4	
133396/03	**Washer,** Plain, under Nuts (RS.14/101)		4	
134647/01	**Washer,** Spring, under Nuts (RS.12/46)		4	
1447	**Over-rider** (0/2249)		2	
209	**Over-rider Moulding** (RS.66/1)		2	
133396/02	**Nut,** securing Over-riders to Bumper Bar (RS.11/12)		2	
134787/02	**Washer,** Plain, under Nuts (RS.14/77)		2	
136647/01	**Washer,** Spring, under Nuts (RS.12/46)		2	

BODY FITTINGS

Part No.	Description	Plate No.	No. per Unit	Remarks
305655	**MEDALLION FOR REAR BUMPER**		1	
13104	**Nut,** securing Medallion to Rear Bumper		2	
423654	**Washer,** Plain, under Nuts		2	
430241/04	**Washer,** Spring, under, Nuts		2	
136296	**BRACKET, SECURING REAR BUMPER TO FRAME**		2	
432944	**Packing Piece**		As req'd	
11106/09	**Bolt,** securing Bumper to Bracket		4	
11106/08	**Bolt,** securing Bracket to Frame		4	
422514/07	**Nut,** Nyloc, on Bolts		8	
422500/03	**Washer,** Plain, under Nuts		4	
11106/11	**Bolt,** securing Bumper to Bracket		4	USED WHEN UP TO 2 OFF PACKING PIECE PART No. 432944 ARE FITTED.
94/632278	**PLINTH BEHIND REAR BUMPER**		1	
94/669192	**'D' MOTIF ON BONNET**		1	
94/659193	**Seating Washer,** for 'D' Motif		1	
13104	**Nut,** securing 'D' Motif to Bonnet		2	
430241/04	**Washer,** Spring, under Nuts		2	
94/669190	**CHROME BONNET MOTIF ASSEMBLY**		1	
422543/1	**Nut,** securing Motif to Bonnet		4	
430241/04	**Washer,** Spring, under Nuts		4	
170764	**CHROME MOULDING ON R.H. SIDE OF BONNET**		1	
170763	**CHROME MOULDING ON L.H. SIDE OF BONNET**		1	
BD.11719	**Clip,** securing Bonnet Mouldings		22	
425269/04	**Rivet,** securing Clips		22	

BODY FITTINGS

Part No.	Description	Plate No.	No. per Unit	Remarks
370409	**CHROME MOULDING ON R.H. SIDE OF SCUTTLE**		1	
370408	**CHROME MOULDING ON L.H. SIDE OF SCUTTLE**		1	
BD.11719	**Clip,** securing Scuttle Mouldings		4	
425269/04	**Rivet,** securing Clips		4	
170766	**CHROME MOULDING FOR R.H. FRONT DOOR**		1	
170765	**CHROME MOULDING FOR L.H. FRONT DOOR**		1	
BD.11719	**Clip,** securing Mouldings to Doors		14	
425269/04	**Rivets,** securing Clips to Doors		14	
470128	**CHROME FINISHER AT TOP REAR OF R.H. FRONT DOOR (WAIST)**		1	
470127	**CHROME FINISHER AT TOP REAR OF L.H. FRONT DOOR (WAIST)**		1	
170767	**CHROME MOULDING FOR REAR DOORS**		2	
BD.11719	**Clip,** securing Mouldings to Rear Doors		14	
425269/04	**Rivet,** securing Clips		14	
470128	**CHROME FINISHER AT TOP REAR OF R.H. REAR DOOR (WAIST)**		1	
470127	**CHROME FINISHER AT TOP REAR OF L.H. REAR DOOR (WAIST)**		1	
425290/04	**Screw,** securing Finishers to Doors		4	

BODY FITTINGS

Part No.	Description	Plate No.	No per Unit	Remarks
170630	**CHROME FINISHER FOR R.H. 'D' POST**		1	
170629	**CHROME FINISHER FOR L.H. 'D' POST**		1	
423190/09	**Screw,** (Chrome), securing Finishers		10	
170769	**CHROME MOULDING FOR R.H. REAR QUARTER**		1	
170768	**CHROME MOULDING FOR L.H. REAR QUARTER**		1	
BD.11719	**Clip,** for Rear Quarter Moulding		14	
BD.4919/1	**Bolt,** securing Mouldings to Rear Quarters		8	
422543/4	**Nut,** on Bolts		8	
423199/5	**Washer,** Plain, under Nuts		8	
430241/03	**Washer,** Spring, under Nuts		8	
170924	**CHROME FINISHER AT FRONT OF R.H. DRIP MOULDING**		1	
170923	**CHROME FINISHER AT FRONT OF L.H. DRIP MOULDING**		1	
170922	**CHROME FINISHER AT CENTRE OF DRIP MOULDINGS**		2	
170926	**CHROME FINISHER AT REAR OF R.H. DRIP MOULDING**		1	
170925	**CHROME FINISHER AT REAR OF L.H. DRIP MOULDING**		1	

Part No.	Description	Plate No.	No. per Unit	Remarks
BD.17139	**CHROME JOINT COVERS FOR FINISHERS**		4	
BD.540/9	**Screw**, securing Joint Covers to ' B.C. ' Posts		2	
425269/04	**Rivet**, securing Joint Covers to ' D ' Posts		2	
BD.24041	**R.H. FRONT DOOR FULLY TRIMMED (COMPLETE WITH ALL FITTINGS)**		1	
BD.24040	**L.H. FRONT DOOR FULLY TRIMMED (COMPLETE WITH ALL FITTINGS)**		1	
BD.24043	**R.H. FRONT DOOR ASSEMBLY LESS LOCK AND REMOTE CONTROL**		1	
BD.24042	**L.H. FRONT DOOR ASSEMBLY LESS LOCK AND REMOTE CONTROL**		1	
63/626062	**LOCK AND REMOTE CONTROL FOR R.H. FRONT DOOR**		1	
63/626061	**LOCK AND REMOTE CONTROL FOR L.H. FRONT DOOR**		1	
423195/33	**Screw**, securing Lock and Remote Control to Doors		14	
51/617082	**Washer**, Special on Screws		6	
422508/10	**Washer**, Shakeproof, on Screws		28	
51/621052	**STRIKER FOR R.H. FRONT DOOR LOCK**		1	
51/621051	**STRIKER FOR L.H. FRONT DOOR LOCK**		1	
82513/05	**Screw**, securing Strikers		4	

BODY FITTINGS

Part No.	Description	Plate No.	No. per Unit	Remarks
63/646568	**OUTSIDE HANDLE (NON-LOCKING) FOR R.H. FRONT DOOR**		1	
63/646566	**OUTSIDE HANDLE (LOCKING) FOR L.H. FRONT DOOR**		1	
63/697410	**Locking Barrel,** for Outside Handle		1	
63/636569	**End Clip,** for Outside Handles		2	
63/637234	**Seating Washer,** for End Clips		2	
63/637233	**Seating Washer,** for Outside Handles		2	
51/636243	**INSIDE HANDLE FOR FRONT DOORS**		2	
51/636245	**Escutcheon,** for Inside Door Handles		2	
51/636244	**Locking Pin,** for Inside Door Handles		2	
53233	**R.H. FRONT DOOR LIGHT FRAME COMPLETE WITH NO DRAUGHT VENTILATOR**		1	
BD.23394	**Rubber Seal,** for Glass Frame		1	
370343	**Felt,** for Front Glass Channel		1	
370531	**Felt,** for Top Glass Channel		1	
370532	**Felt,** for Rear Glass Channel		1	
170701	**Rubber Seal,** for No Draught Ventilator		1	
170636	**No Draught Ventilator and Glass Assembly**		1	
53232	**L.H. FRONT DOOR LIGHT FRAME COMPLETE WITH NO DRAUGHT VENTILATOR**		1	
BD.23393	**Rubber Seal,** for Glass Frame		1	
370343	**Felt,** for Front Glass Channel		1	
370531	**Felt,** for Top Glass Channel		1	
370532	**Felt,** for Rear Glass Channel		1	
170700	**Rubber Seal,** for No Draught Ventilator		1	
170635	**No Draught Ventilator and Glass Assembly**		1	
170636	**NO DRAUGHT VENTILATOR FOR R.H. FRONT DOOR**		1	
170635	**NO DRAUGHT VENTILATOR FOR L.H. FRONT DOOR**		1	
170634	**Glass Only** for Front No Draught Ventilator		2	
370383	**Everseal,** Front, between Glass and Frame (13½" long)		2	
370384	**Everseal,** Rear between Glass and Frame (14½" long)		2	
BD.17112	**Locking Handle,** for R.H. No Draught Ventilator		1	
BD.17111	**Locking Handle,** for L.H. No Draught Ventilator		1	
BD.3897	**Rubber Washer,** behind Locking Handles		2	
BD.18073	**Peg,** securing Locking Handles to Spindle on Inner Frames		2	
BD.17114	**Bolt,** securing Locking Handles to Inner Frames		2	
BD.18171	**Fibre Washer,** on Bolts		2	
BD.17211	**Nut,** on Bolts		2	

BODY FITTINGS

Part No.	Description	Plate No.	No. per Unit	Remarks
470153	**UPPER PIVOT ARM FOR NO DRAUGHT VENTILATOR IN R.H. FRONT DOOR**		1	
470152	**UPPER PIVOT ARM FOR NO DRAUGHT VENTILATOR IN L.H. FRONT DOOR**		1	
BD.17253	**Pin,** for Upper Pivots		2	
BD.9647	**INDEX SLEEVE FOR LOWER PIVOT SPINDLE, CONTROLLING OPENING ANGLE OF NO DRAUGHT VENTILATORS**		2	
BD.9657	**Bush,** on Lower Pivot Spindles engaging with Index Sleeves		2	
BD.9651	**Spring,** on Lower Pivot Spindles. below Index Sleeves		2	
BD.18067	**Pin,** tensioning Springs		2	
UFN.219/L	**Nut,** locking Springs and Index Sleeves to Lower Pivot Spindles		4	
170701	**SEALING RUBBER FOR R.H. FRONT NO DRAUGHT VENTILATOR**		1	
170700	**SEALING RUBBER FOR L.H. FRONT NO DRAUGHT VENTILATOR**		1	
170637	**GLASS FOR FRONT DOOR LIGHT FRAME**		2	
63/636208	**Draught Strip,** for Glasses (inside)		2	
92/631090	**CHANNEL AT BOTTOM OF R.H. FRONT DOOR GLASS**		1	
92/631089	**CHANNEL AT BOTTOM OF L.H. FRONT DOOR GLASS**		1	

BODY FITTINGS

Part No.	Description	Plate No.	No. per Unit	Remarks
51/63611	**RUBBER SEAL IN GLASS CHANNEL**		2	
63/631088	**WINDOW REGULATOR ASSEMBLY FOR R.H. FRONT DOOR**		1	
63/631087	**WINDOW REGULATOR ASSEMBLY FOR L.H. FRONT DOOR**		1	
12104/04	**Screw,** securing Window Regulators to Front Door		8	
51/636242	**HANDLE FOR WINDOW REGULATORS**		2	
51/636245	**Escutcheon,** for Regulator Handles		2	
51/636244	**Locking Pin,** for Handles		2	
53/636062	**HINGE ASSEMBLY FOR R.H. FRONT DOOR**		2	
53/631061	**HINGE ASSEMBLY FOR L.H. FRONT DOOR**		2	
12305/06	**Screw,** Set, securing Hinges to Body		16	
BD.17034/3	**Screw,** Set, securing Hinges to Doors		16	
88003	**Washer,** Spring, on Setscrews		32	
222/350	**CHECK ARM ASSEMBLY FOR FRONT DOORS**		2	
63/611492	**SWIVEL BRACKET FOR R.H. DOOR CHECK ARM**		1	
63/611491	**SWIVEL BRACKET FOR L.H. DOOR CHECK ARM**		1	
222/247	**Screw,** Shouldered, securing Check Arms to Swivels		2	
423197/13	**Screw,** Set, securing Swivels to Posts		8	

BODY FITTINGS

Part No.	Description	Plate No.	No. per Unit	Remarks
86327	**PULL HANDLE FOR FRONT DOOR**		2	
87532/05	**Screw**, securing Pull Handles		4	
53041	**CASING ASSEMBLY ON R.H. FRONT DOOR**		1	
170169	**Armrest Assembly**, on R.H. Front Door Casing		1	
BD.711/14	**Screw**, securing Armrest		4	
BD.541/13	**Washer**, Plain, on Screws		4	
BD.23179	**Clip**, securing Casing		20	
53040	**CASING ASSEMBLY ON L.H. FRONT DOOR**		1	
170168	**Armrest Assembly**, on L.H. Front Door Casing		1	
BD.711/14	**Screw**, securing Armrest		4	
BD.541/13	**Washer**, Plain, on Screws		4	
BD.23179	**Clip**, securing Casing		20	
423108/09	**Screw**, securing Casings to Front Doors		6	
92/636648	**SEALING RUBBER FOR FRONT DOORS (HINGE FACE) (31" LONG)**		2	
63/636649	**SEALING RUBBER FOR FRONT DOORS (BOTTOM OUTER) (38" LONG)**		2	
63/636637	**SEALING RUBBER FOR FRONT DOORS (WAIST) (30" LONG)**		2	
370334	**FENCE PLATE FOR FRONT DOORS**		2	
370423	**DRAUGHT EXCLUDER (FRONT) FOR FRONT DOORS (69" LONG)**		2	

BODY FITTINGS

Part No.	Description	Plate No.	No. per Unit	Remarks
370424	**DRAUGHT EXCLUDER (REAR) FOR FRONT DOORS (46" LONG)**		2	
63/634692	**TREAD PLATE FOR R.H. FRONT DOOR SILL**		1	
54/634694	**TREAD PLATE EXTENSION FOR R.H. FRONT DOOR SILL**		1	
63/634691	**TREAD PLATE FOR L.H. FRONT DOOR SILL**		1	
94/634693	**TREAD PLATE EXTENSION FOR L.H. FRONT DOOR SILL**		1	
425629/05	**Rivet,** securing Tread Plates and Extensions (TAP/D/BS./440)		28	
BD.24053	**R.H. REAR DOOR FULLY TRIMMED (COMPLETE WITH ALL FITTINGS)**		1	
BD.24052	**L.H. REAR DOOR FULLY TRIMMED (COMPLETE WITH ALL FITTINGS)**		1	
BD.24055	**R.H. REAR DOOR ASSEMBLY — LESS LOCK AND REMOTE CONTROL**		1	
BD.24054	**L.H. REAR DOOR ASSEMBLY — LESS LOCK AND REMOTE CONTROL**		1	

BODY FITTINGS

Part No.	Description	Plate No.	No. per Unit	Remarks
170568	**LOCK AND REMOTE CONTROL FOR R.H. REAR DOOR**		1	
170567	**LOCK AND REMOTE CONTROL FOR L.H. REAR DOOR**		6	
423195/33	**Screw,** securing Lock and Remote Control to Doors		6	
422508/10	**Washer,** Shakeproof, on Screws		6	
87554/3	**Screw,** securing Lock and Remote Control to Doors		8	
88007	**Washer,** Shakeproof, on Screws		8	
51/621052	**STRIKER FOR R.H. REAR DOOR LOCK**		1	
51/621051	**STRIKER FOR L.H. REAR DOOR LOCK**		1	
87513/05	**Screw,** securing Strikers		4	
63/646568	**OUTSIDE HANDLE (NON-LOCKING) FOR R.H. REAR DOOR**		1	
63/646566	**OUTSIDE HANDLE (LOCKING) FOR L.H. REAR DOOR**		1	
63/697410	**Locking Barrel,** for Outside Handle		1	
63/636569	**End Clip,** for Outside Handles		2	
63/637234	**Seating Washer,** for End Clips		2	
63/637233	**Seating Washer,** for Outside Handles		2	
51/636243	**INSIDE HANDLE FOR REAR DOORS**		2	
51/636245	**Escutcheon,** for Inside Door Handles		2	
51/636244	**Locking Pin,** for Inside Door Handles		2	
53235	**R.H. REAR DOOR LIGHT FRAME ASSEMBLY**		1	
53234	**L.H. REAR DOOR LIGHT FRAME ASSEMBLY**		1	
BD.23395	**Rubber Seal,** for Glass Frame		2	
370532	**Felt,** for Glass Channels		6	

BODY FITTINGS

Part No.	Description	Plate No.	No. per Unit	Remarks
170645	**GLASS FOR REAR DOORS**		2	
370392	**Draught Strip**, for Glasses (Inside)		2	
BD.23218	**CHANNEL AT BOTTOM OF R.H. REAR DOOR GLASS**		1	
BD.23217	**CHANNEL AT BOTTOM OF L.H. REAR DOOR GLASS**		1	
51/636112	**RUBBER SEAL IN GLASS CHANNEL**		2	
63/631092	**WINDOW REGULATOR FOR R.H. REAR DOOR**		1	
63/631091	**WINDOW REGULATOR FOR L.H. REAR DOOR**		1	
12104/01	**Screw**, Set, securing Regulators to Doors		12	
422500/01	**Washer**, Plain, on Setscrews		12	
430241/04	**Washer**, Spring, on Setscrews		12	
51/636242	**HANDLE FOR WINDOW REGULATORS**		2	
51/636245	**Escutcheon**, for Regulator Handles		2	
51/636244	**Locking Pin**, for Handles		2	
370515	**HINGE ASSEMBLY, UPPER, FOR R.H. REAR DOOR**		1	
370514	**HINGE ASSEMBLY, UPPER, FOR L.H. REAR DOOR**		1	
BD.17034/5	**Screw**, Set, securing Hinges to Doors		8	
12305/06	**Screw**, Set, securing Hinges to Body		6	
12305/05	**Screw**, Set, securing Hinges to Body		2	
22104/06	**Screw**, Set, securing Hinges to Body		4	
88003	**Washer**, Spring, on Setscrews		20	

Part No.	Description	Plate No.	No. per Unit	Remarks
222/114	**HINGE ASSEMBLY, LOWER, FOR R.H. REAR DOOR**		1	
222/113	**HINGE ASSEMBLY, LOWER, FOR L.H. REAR DOOR**		1	
BD.17034/5	**Screw,** Set, securing Hinges to Doors		8	
12305/06	**Screw,** Set, securing Hinges to Body		8	
88003	**Washer,** Spring, on Setscrews		16	
53/617000	**TAPPED PLATE, FOR UPPER HINGE ON REAR DOORS**		4	
53/617001	**TAPPED PLATE, FOR LOWER HINGE ON REAR DOORS**		4	
222/350	**CHECK ARM ASSEMBLY FOR REAR DOORS**		2	
63/611492	**SWIVEL BRACKET FOR R.H. REAR DOOR CHECK ARM**		1	
63/611491	**SWIVEL BRACKET FOR L.H. REAR DOOR CHECK ARM**		1	
222/247	**Screw,** Shouldered, securing Check Arms to Swivels		2	
423197/13	**Screw,** Set, securing Swivels to Posts		8	
370357	**PULL BAR FOR REAR DOORS**		2	
423190/13	**Screw,** securing Pull Bars		12	

BODY FITTINGS

Part No.	Description	Plate No.	No. per Unit	Remarks
53318	**CASING ASSEMBLY ON R.H. REAR DOOR**		1	
BD.23179	**Clip,** retaining Casings to Door		12	
53317	**CASING ASSEMBLY ON L.H. REAR DOOR**		1	
BD.23179	**Clip,** retaining Casing to Door		12	
432175/12	**Woodscrew,** securing Casings		12	
BD.23544	**SEALING RUBBER FOR REAR DOORS (BOTTOM OUTER) (32" LONG)**		2	
370391	**SEALING RUBBER FOR REAR DOOR (WAIST OUTER) (32" LONG)**		2	
92/637262	**BUFFER IN REAR DOOR FOR COURTESY LIGHT SWITCH**		2	
370335	**FENCE PLATE FOR REAR DOORS**		2	
370242	**DRAUGHT EXCLUDER FOR REAR DOOR (46" LONG)**		4	
BD.23376	**DRAUGHT EXCLUDER FOR TOP OF REAR DOORS**		2	
170918	**RUBBER MAT ON REAR DOOR SILLS**		2	

Part No.	Description	Plate No.	No. per Unit	Remarks
370339	**CAPPING (ALUMINIUM) FOR REAR DOOR SILLS**		2	
170642	**FINISHER (ALUMINIUM) FOR REAR DOOR SILLS**		2	
425269/04	**Pop Rivet,** securing Finishers		40	
	CARPETS			
53383	**Carpet Assembly,** for Front Floor		1	DR.450 ONLY.
53385	**Carpet Assembly,** for Front Floor		1	DR.451 ONLY.
170932	**Carpet Assembly,** for Front Floor R.H. Extension		1	
170931	**Carpet Assembly,** for Front Floor L.H. Extension		1	
170980	**Carpet Assembly,** for Occasional Seat Floor		1	
53378	**Carpet Assembly,** for Rear Floor		1	
170927	**Carpet Assembly,** for Rear Seat Heelboard		1	
92/634202	**RUBBER RETAINER HOLDING CARPETS AT FRONT DOOR SILLS**		2	
63/634468	**Fixing Strip,** securing Rubber Retainers at Front Door Sills		2	
425269/05	**Rivet,** securing Fixing Strips		20	
170641	**RUBBER RETAINER, HOLDING CARPETS AT REAR DOOR SILLS**		2	
170640	**Fixing Strip,** securing Rubber Retainers at Rear Door Sills		2	
425269/05	**Rivet,** securing Fixing Strips		20	
171034	**UNDERFELT FOR FRONT FLOOR**		1	

BODY FITTINGS

Part No.	Description	Plate No.	No. per Unit	Remarks
171033	**UNDERFELT FOR OCCASIONAL SEAT FLOOR**		1	
171032	**UNDERFELT FOR REAR FLOOR BODY INSULATION—FLINTKOTE**		1	
94/636360	**Flintkote,** for Inner Facing Sill, Front Doors		2	
94/636361	**Flintkote,** for Inner Top, Front Doors		2	
94/636363	**Flintkote,** for Inner Bottom, Front Doors		2	
94/634373	**Flintkote,** for Toeboards		2	
171026	**Flintkote,** for Rear Floor—Front		1	
171027	**Flintkote,** for Rear Floor—Rear		1	
94/634374	**Flintkote,** for Front Floor—Sill		2	
94/634315	**Flintkote,** for Front Floor		2	
	BODY INSULATION—HARDURA			
94/634328	**Hardura,** for R.H. Toeboard		1	**R.H. DRIVE CARS ONLY**
94/634377	**Hardura,** for L.H. Toeboard		1	
95/634378	**Hardura,** for R.H. Toeboard		1	**L.H. DRIVE CARS ONLY**
95/634377	**Hardura,** for L.H. Toeboard		1	
	BODY INSULATION — RUBBERISED FELT (¼" THICK)			
94/632310	**Rubberised Felt,** for R.H. Wheelarch		1	
94/632309	**Rubberised Felt,** for L.H. Wheelarch		1	
94/634370	**Rubberised Felt,** for Boot Floor		1	
171017	**Rubberised Felt,** for Front Roof Panel		1	
171018	**Rubberised Felt,** for Centre Roof Panel		1	
171019	**Rubberised Felt,** for Rear Roof Panel		1	
171021	**Rubberised Felt,** for Roof R.H. Quarter Panel		1	
171020	**Rubbersied Felt,** for Roof L.H. Quarter Panel		1	
	BODY INSULATION — RUBBERISED FELT (½" THICK)			
94/634386	**Rubberised Felt,** for Gearbox Cover		1	
94/634389	**Rubberised Felt,** for R.H. Toeboard		1	**R.H. DRIVE CARS ONLY**
94/634388	**Rubberised Felt,** for L.H. Toeboard		1	
95/634389	**Rubberised Felt,** for R.H. Toeboard		1	**L.H. DRIVE CARS ONLY**
95/634388	**Rubberised Felt,** for L.H. Toeboard		1	

Part No.	Description	Plate No.	No. per Unit	Remarks
	SEALING RUBBERS			
63/635392	**Sealing Rubber,** for Front Wings		2	
92/659209	**Sealing Rubber,** for Valances (50" long)		2	
92/659210	**Sealing Rubber,** for Bonnet (55" long)		1	
92/635378	**Sealing Rubber,** for Windscreen (Glazing)		1	
92/635379	**Sealing Rubber,** for Windscreen (Filler)		1	
92/636648	**Sealing Rubber,** for Front Door Hinge Faces (31" long)		2	
63/636649	**Sealing Rubber,** for Front Doors, Outer Bottom (38" long)		2	
63/636637	**Sealing Rubber,** for Front Doors, Waist Outer (30" long)		2	
370423	**Sealing Rubber,** for Front Door Apertures (69" long)		2	
370424	**Sealing Rubber,** Rear, for Front Door Apertures (46" long)		2	
BD.23394	**Sealing Rubber,** for R.H. Front Door Glass Frame		1	
BD.23393	**Sealing Rubber,** for L.H. Front Door Glass Frame		1	
170701	**Sealing Rubber,** for No Draught Ventilator, R.H. Front Door		1	
170700	**Sealing Rubber,** for No Draught Ventilator, L.H. Front Door		1	
370424	**Sealing Rubber,** Front and Rear, for Rear Doors		4	
BD.23376	**Sealing Rubber Assembly,** for top of Rear Door Apertures		2	
370392	**Sealing Rubber,** for Rear Doors, Waist		2	
BD.23544	**Sealing Rubber,** for Rear Doors, Outer Bottom		2	
370391	**Sealing Rubber,** for Rear Doors, Waist Outer		2	
BD.23395	**Sealing Rubber,** for Rear Door Glass Frame		2	
370427	**Sealing Rubber,** on 'D' Post, for Rear Quarter Light		2	
BD.23375	**Sealing Rubber,** for Rear Quarter Light Surround		2	
370361	**Sealing Rubber,** for Rear Quarter Light Frame		2	
370362	**Sealing Rubber,** for Rear Quarter Hinge Pillar		2	
94/632598	**Sealing Rubber,** for Trunk Lid Opening		1	
	BODY MOUNTINGS			
11106/12	**Bolt,** Body Mounting Point No. 1 (Inner and Intermediate)		4	
11106/24	**Bolt,** Body Mounting Point No. 1 (Outer)		2	**ALTERNATIVES**
11106/22	**Bolt,** Body Mounting Point No. 1 (Outer)		2	
11106/14	**Bolt,** Body Mounting Point No. 2 (Outer)		2	
12206/10	**Screw,** Set, Body Mounting Point No. 2 (Inner)		2	
12206/18	**Bolt,** Body Mounting Point No. 3 (Outer)		2	
12206/11	**Screw,** Set, Body Mounting Point No. 3 (Centre)		2	
12206/10	**Screw,** Set, Body Mounting Point No. 3 (Inner)		2	
12206/14	**Screw,** Set, Body Mounting and Seat Mounting		2	
12106/11	**Bolt,** Body Mounting Point No. 4 (Outer)		2	
12206/11	**Screw,** Set, Body Mounting Point No. 4 (Centre)		2	
12206/10	**Screw,** Set, Body Mounting Point No. 4 (Inner)		2	
12106/11	**Screw,** Set, Body Mounting Point No. 5		2	
12106/12	**Screw,** Set, Body Mounting Point No. 6		2	**ALTERNATIVES**
12206/16	**Screw,** Set, Body Mounting Point No. 6		2	
12106/11	**Screw,** Set, Body Mounting Point No. 7		2	
12106/10	**Screw,** Set, Dash Panel Mounting Bracket		2	
422500/03	**Washer,** for Body Mounting Points		18	
423432	**Nut,** on Bolts			
401650	**Pad,** on Mountings ($\frac{1}{8}$" thick)		As req'd	
423416	**Pad,** on Mountings ($\frac{3}{16}$" thick)		6	
265809	**Locating Washer**		32	
400994	**Locating Washer** (Rubber)		32	

ELECTRICAL EQUIPMENT

Part No.	Description	Plate No.	No. per Unit	Remarks
136300	**DYNAMO (C.45-PV6-22530)**	32—1	1	Fitted from Chassis No. 136711 to 137161 DQ.450 And to all DQ.451.
7906	**Brushes** (54210090)		1 set	
7910	**Armature** (239428)		1	
2789	**Field Coils** (238820)		1 set	
126300/02	**Frame Bracket,** Commutator End (54211094)		1	
2757	**Bearing,** Driving End (189308)		1	
7909	**Bushing,** Commutator End (239263)		1	
136300/04	**Oiler,** for Felt and Disc (239368)		1	
7607	**Spring,** for Brush Tension (54210091)		1 set	
2749	**Nut,** on Shaft (180620)		1	
136595	**DYNAMO (C.42-22900)**		1	Fitted to Chassis No. 137162 and subs. DQ.450 And to all DR.450/1
8583	**Brushes** (54213141)		1 set	
8587	**Armature** (54210952)		1	
8588	**Field Coils** (54210950)		1 set	
8880	**Frame Bracket,** Commutator End (54213565)		1	
136183/07	**Bearing,** Driving End (189307)		1	
8881	**Bushing,** Commutator End (54210144)		1	
136183/04	**Oiler** (54211097)		1	
136183/05	**Spring,** for Brush Tension (227542)		1 set	
136183/10	**Nut,** on Shaft (198800)		1	
8590	**Bolt,** through fixing (54210147)		2	
307896	**BRACKET SUPPORTING DYNAMO (FRONT)**	32—2	1	
307895	**BRACKET SUPPORTING DYNAMO (SIDE)**		1	Fitted from Chassis No. 136711 to 137161 DQ.450 And to all DQ.451
309030	**BRACKET SUPPORTING DYNAMO (SIDE)**	32—3	1	Fitted to Chassis No. 137162 and subs. DQ.450 And to all DR.450/1
22105/06	**Screw,** Set, securing Side Bracket to Cylinder Block		3	
430241/05	**Washer,** Spring, on Setscrews		3	
11105/06	**Bolt,** securing Front Bracket to Side Bracket		2	
13105	**Nut,** on Bolts		2	
430241/05	**Washer,** Spring, under Nuts		2	
11105/10	**Bolt,** securing Dynamo to Bracket (Front)		1	
11105/08	**Bolt,** securing Dynamo to Bracket (Rear)		1	
422500/02	**Washer,** Spacing, on Bolts		2	
13105	**Nut,** on Bolts		2	
430241/05	**Washer,** Spring, under Nuts		2	

Part No.	Description	Plate No.	No. per Unit	Remarks
307894	**ADJUSTING PLATE FOR DYNAMO**		1	Fitted from Chassis No. 136711 to 137161 DQ.450 And to all DQ.451
309029	**ADJUSTING PLATE FOR DYNAMO**	32—4	1	Fitted to Chassis No. 137162 and subs. DQ.450 And to all DR.450/1
425236	**Bolt**, securing Plate to Dynamo		1	
430241/05	**Washer**, Spring, on Bolt		1	
430446	**Stud**, securing Plate to Cylinder Block		1	Used on Part No. 307894
432785	**Stud**, securing Plate to Cylinder Block		1	Used on Part No. 309029
401883	**Serrated Washer**, on Stud		2	
422514/06	**Nut**, Nyloc, on Stud		1	
422500/02	**Washer**, Plain, under Nut		1	**USED ON PART No. 309029 ONLY**
430241/05	**Washer**, Spring, under Nut		1	
307883	**DYNAMO PULLEY** ($\frac{3}{8}$")		1	Fitted from Chassis No. 136711 to 137161 DQ.450 And to all DQ.451
C.21678	**DYNAMO PULLEY** ($\frac{3}{8}$")		1	**DQ.450/1 SUPPLIED TO SPECIAL ORDER ONLY AND MUST ONLY BE FITTED IN CONJUNCTION WITH FAN BELT C.21679.**
304503	**FAN ASSEMBLY FOR DYNAMO PULLEY**		1	Fitted from Chassis No. 136711 to 137161 DQ.450 And to all DQ.451
308983	**DYNAMO PULLEY** ($\frac{1}{2}$")		1	Fitted to Chassis No. 137162 and subs. DQ.450 And to all DR.450/1
C.20689	**DYNAMO PULLEY** ($\frac{1}{2}$")	32—5	1	**DQ.450/1 AND DR.450/1 SUPPLIED TO SPECIAL ORDER ONLY AND MUST ONLY BE FITTED IN CONJUNCTION WITH FAN BELT C.20808**
432798	**FAN ASSEMBLY FOR DYNAMO PULLEY**	32—6	1	Fitted to Chassis No. 137162 and subs. DQ.450 And to all DR.450/1

ELECTRICAL EQUIPMENT

Part No.	Description	Plate No.	No. per Unit	Remarks
133544	**STARTER MOTOR (418G-25533D)**	32—7	1	
2804	**Brush** (255659)		1 set	
2811	**Spring**, for Brush Tension (270004)		1 set	
2800	**Armature** (255463)		1	
2810	**Field Coils** (256578)		1 set	
2801	**Bushing**, Commutator End (255491)		1	
2812	**Bushing**, Driving End (270038)		1	
133544/07	**Cover Band** (255557)		1	
133544/08	**Bracket**, Commutator End (256748)		1	
2806	**Spring**, retaining Pinion (255728)		1	
2796	**Pinion and Sleeve** (255194)		1	
2818	**Main Spring** (270889)		1	
2808	**Nut**, on Shaft, securing Dynamo Pulley and Fan (255851)		1	
11106/18	**Bolt**, securing Starter Motor		2	
422514/07	**Nut**, Nyloc, on Bolts		2	
308723	**SOLENOID FOR STARTER MOTOR (2ST.76469)**	32—8	1	
422544/10	**Bolt**, securing Solenoid to Dash		2	
423199/2	**Washer**, Plain, on Bolts		2	
430241/03	**Washer**, Spring, on Bolts		2	
308101	**IGNITION COIL (HA.12-45102)**	32—9	1	
12105/04	**Screw**, Set, securing Coil to Dash		2	
422500/02	**Washer**, Plain, on Setscrews		2	
430241/05	**Washer**, Spring, on Setscrews		2	
308956	**DISTRIBUTOR ASSEMBLY (40715D/F)**	32—10	1	
136104/01	**Cap** (54411740)		1	
134397/02	**Brush and Spring** (418856)		1	
136104/02	**Rotor Arm** (425620)		1	
136104/04	**Contact Points** (54411772)		2 sets	
136104/03	**Condenser** (54411935)		1	
136104/06	**Springs**, Auto Advance (54411934)		1 set	
136310/01	**Vacuum Unit** (54412403)		1	
136104/10	**Shaft and Action Plate** (425913)		1	
432513	**Driving Collar and Gear**		1	
422524/32	**Mills Pin**		1	
413819	**Washer** (Celeron)		1	
304646	**Clamp**, securing Distributor		1	
22104/05	**Screw**, securing Clamp to Distributor Bracket		2	
422500/01	**Washer**, Plain, on Screws		2	
308832	**Bracket**, for Distributor	32—11	1	
22104/07	**Screw**, Set, securing Bracket		1	
430241/04	**Washer**, Spring, on Setscrew		1	
22105/10	**Screw**, Set, securing Bracket		1	
430241/05	**Washer**, Spring, on Setscrew		1	

Part No.	Description	Plate No.	No. per Unit	Remarks
308841	**REVOLUTION COUNTER DRIVE PINION**	32—12	1	
432524	**Thrust Washer,** for Pinion	32—13	1	
432523	**Adaptor and Bush Assembly**	32—14	1	
432514	**Oil Seal**	32—15	1	
430690	**Screw,** locating Adaptor in Distributor Mounting Bracket		1	
430241/05	**Washer,** Spring, on Locating Screw		1	
308957	**SUCTION PIPE ASSEMBLY FROM R.H. CARBURETTER TO DISTRIBUTOR VACUUM CONTROL**	32—16	1	
C.20575	**PETROL PUMP (AUB.161)**	32—17	1	
308447/08	**Filter** (AUA.1465)		2	
9098	**Diaphragm Assembly** (AUB.6035)		2	
307855/10	**Armature Roller** (AUA.1433)		22	
9320	**Armature Spring** (AUB.521)		2	
9100	**Rocker and Blade Assembly** (AUB.6022)		2	
9941	**Lucar Connector** (AUA.692)		4	
9942	**Insulating Sleeve,** for Connector (AUB.611)		2	
308364	**CONTROL BOX (RB.340-37304)**		1	Fitted from Chassis No. 136711 to 137161 DQ.450 And to all DQ.451
7912	**Cover** (54380178)		1	
7913	**Screw,** securing Cover (198886)		2	
8554	**Resistance** (54380858)		1	
7916	**Gasket,** under Cover (226479)		1	
11104/08	**Bolt,** securing Control Box to Dash		3	
136592	**CONTROL BOX (RB.340-37331)**	32—18	1	Fitted to Chassis No. 137162 and subs. DQ.450 And to all DR.450/1
8558	**Cover** (54381342)		1	
9943	**Screw,** securing Cover (186088)		2	
8559	**Resistance,** (Swamp) (54380438)		1	
8560	**Resistance** (Points) (54380673)		1	
426085/31	**Screw,** securing Control Box to Dash		3	
308097	**FUSE BOX (4FJ-033283)**	32—19	1	
C.5638	**Fuse, 35 Amp.** (188218)		4	
6471	**Terminal Screw** (120650)		4	
422545/13	**Screw,** securing Fuse Box to Dash		1	

ELECTRICAL EQUIPMENT

Part No.	Description	Plate No.	No. per Unit	Remarks
9390	**COVER, OVER FUSE BOX (54380114)**		1	
136150	**HEADLAMP ASSEMBLY (58260A/D-F700)**		2	**R.H. DRIVE CARS HOME AND EXPORT**
136150/01	**Outer Rim** (54520073)	32—20	2	
3446	**Rubber Dust Excluder** (552906)	32—21	2	
134316/04	**Light Unit** (553921)	32—22	2	
134316/08	**Plate,** retaining Light Unit (554872)	32—23	2	
6057	**Bulb Adaptor** (554602)	32—24	2	
136150/02	**Rubber Gasket** (54520131)	32—25	2	
135122/03	**Bulb** (414-50/40W)		2	
136151	**HEADLAMP ASSEMBLY (58479D-F700)**		2	**L.H. DRIVE CARS—EXPORT EXCEPT EUROPE**
136151/06	**Outer Rim** (54520443)		2	
3446	**Rubber Dust Excluder** (552906)		2	
3454	**Adaptor,** C/W Cables (553724)		2	
7172	**Rubber Gasket** (554178)		2	
8077	**Plate,** Retaining Light Unit (554179)		2	
136152	**HEADLAMP ASSEMBLY (58560A-F700)**		2	**L.H. DRIVE CARS—EXPORT EXCEPT FRANCE**
136150/01	**Outer Rim** (54520073)		2	
3446	**Rubber Dust Excluder** (552906)		2	
134316/08	**Plate,** Retaining Light Unit (554872)		2	
7762	**Light Unit** (556452)		2	
7764	**Bulb Adaptor,** C/W Cables (553738)		2	
136150/02	**Rubber Gasket** (54520131)		2	
7763	**Bulb** (410-45/40W)		2	
136199	**HEADLAMP ASSEMBLY (58561A-F700EF)**		2	**L.H. DRIVE CARS—EXPORT FRANCE ONLY**
136150/01	**Outer Rim** (54520073)		2	
3446	**Rubber Dust Excluder** (552906)		2	
734316/08	**Plate,** retaining Light Unit (554872)		2	
7762	**Light Unit** (556452)		2	
7164	**Adaptor,** C/W Cables (553738)		2	
8612	**Bulb,** Yellow (411-45/40W)		2	

Part No.	Description	Plate No.	No. per Unit	Remarks
C.20464	**HEADLAMP ASSEMBLY (58631-F700)**		2	**R.H. DRIVE CARS—EXPORT SWEDEN ONLY**
136150/01	**Rim** (54520073)		2	
3446	**Dust Excluder** (552906)		2	
6518	**Plate,** retaining Light Unit (554872)		2	
5221	**Screw,** Unit Rim (186137)		6	
6119	**Rim,** seating Unit (554872)		2	
8680	**Light Unit** (54520148)		2	
7765	**Spring,** retaining Bulb (556442)		2	
7764	**Bulb Holder** (553738)		2	
8064	**Terminal Sleeve** (555910)		2	
7763	**Bulb** (410-45/40W)		2	
7766	**Gasket,** seating Lamps (554280)		2	
6521	**Screw,** securing Lamp (554288)		6	
3436	**Trimmer Spring** (552813)		6	
9954	**Sleeve,** on Trimmer Screws (554626)		6	
425286/16	**Screw,** securing Headlamps		8	
88524	**Spire Nut** (SNO.1742/17/8) on Screws		8	
308032	**SIDELAMP, COMPLETE (52426B-517)**		2	
307794/01	**Rim** (516556)	32—26	2	
307794/02	**Screw,** securing Rim (136231)		4	
307794/03	**Lens** (516386)	32—27	2	
307794/04	**Gasket,** seating Lens (516395)	32—28	2	
307794/05	**Seating Rubber,** for Lamp (516553)	32—29	2	
3455	**Adaptor** (553780)	32—30	2	
989	**Bulb** (989—12V/6W)		2	
422547/14	**Screw,** for Sidelamps		4	
430241/03	**Washer,** Spring, on Screws		4	
307795	**FRONT FLASHER LAMP (AMBER LENS) (52337A-L594)**		2	
307795/01	**Rubber Seating,** for Body (576105)	32—31	2	
3485	**Rim** (572734)	32—32	2	
307795/02	**Lens** (Amber) (576108)	32—33	2	
307795/03	**Bulb Holder and Plate Assembly** (576986)	32—34	2	
C.9126	**Bulb** (382—12V/21W)		2	
422545/32	**Screw,** for Flasher Lamp		6	
83/648050	**REAR FLASHER LAMP (AMBER LENS) (53844A-L539)**		2	**R.H. DRIVE CARS—HOME AND EXPORT, AND L.H. DRIVE CARS—EXPORT EUROPE**
83/648064	**Amber Lens and Rim Assembly** (574267)	32—35	2	
305149/02	**Body Assembly,** C/W Bulb Holder (574234)	32—36	2	
83/638066	**Seating Rubber,** for Lens (575640)	32—37	2	
C.8460	**Seating Rubber,** for Body (574231)	32—38	2	
C.9126	**Bulb** (382—12V/21W)		2	

ELECTRICAL EQUIPMENT

Part No.	Description	Plate No.	No. per Unit	Remarks
307804	**REAR FLASHER LAMP (RED LENS) (53686D-L539)**		2	**L.H. DRIVE CARS—EXPORT EXCEPT EUROPE**
305150/01	**Body Lens and Rim Assembly** (574259)	32—35	2	
305149/02	**Body Assembly,** C/W Bulb Holder (574234)	32—36	2	
83/638066	**Seating Rubber,** for Lens (575640)	32—37	2	
C.8460	**Seating Rubber,** for Body (574231)	32—38	2	
C.9126	**Bulb** (382—12V/21W)		2	
63/637293	**Screw,** for Rear Flasher Lamp		4	
430241/03	**Washer,** Spring, on Screws		4	
308640	**FLASHER UNIT (35011-FL5)**	32—39	1	
426934/28	**Bolt,** securing Flasher Unit Adaptor to Dash		2	
305152	**REAR NUMBER PLATE ILLUMINATION LAMP (53278B-532)**		2	
305152/01	**Cover** (574046)	32—40	2	
305152/02	**Clip,** for Cover (574045)	32—41	2	
305152/03	**Rubber Seating,** for Cover (574044)	32—42	2	
3455	**Interior Adaptor** (553780)	32—43	2	
989	**Bulb** (989—12V/6W)		2	
63/637323	**Screw,** for Number Plate Lamp		4	
430241/03	**Washer,** Spring, on Screws		4	
305149	**REVERSE LAMP (53896A-L539)**		2	
5314	**Lens and Rim Assembly** (574258)	32—44	2	
305149/02	**Body Assembly,** C/W Bulb Holder (576357)	32—45	2	
305149/04	**Seating Rubber,** for Lens (575640)	32—46	2	
C.8460	**Seating Rubber,** for Body (574231)	32—47	2	
C.9126	**Bulb** (382—12V/21W)		2	
63/637293	**Screw,** securing Reverse Lamp		4	
43241/03	**Washer,** Spring, on Screws		4	
83/648051	**STOP AND TAIL LAMP (53895A-L551)**		2	
83/648070	**Lens and Rim Assembly** (574615)	32—48	2	
5311	**Bulb Holder** (573828)	32—49	2	
83/638072	**Seating Rubber,** for Lens (576805)	32—50	2	
83/638073	**Seating Rubber,** for Body (574607)	32—51	2	
C.9125	**Bulb** (380—12V—21/6W)		2	
63/637293	**Screw,** securing Stop and Tail Lamps		4	
430241/03	**Washer,** Spring, on Screws		4	

Part No.	Description	Plate No.	No. per Unit	Remarks
307803	**INTERIOR ROOF LIGHT IN DRIVING COMPARTMENT (56061/B-L.562)**	32—52	1	DR.450/1 ONLY
307803/01	**Lens** (535154)		1	
C.9125	**Bulb** (380—12V—21/6W)		1	
307803	**INTERIOR LIGHT (56061/B-L.562)**	32—52	2	
307803/01	**Lens** (535154)		2	
C.9125	**Bulb** (380—12V—21/6W)		2	
305229	**BOOT LIGHT (7/6916)**	32—53	1	
305229/01	**Lens** (7/4540)		1	
423191/05	**Screw**, securing Boot Light		2	
427587	**MERCURY SWITCH FOR BOOT LIGHT (052756-510)**	32—54	1	
989	**Bulb** (989—12V/6W)		1	
423187/02	**Screw**, securing Mercury Switch		2	
304881	**FOG LAMP (55128E-S.F.T.576)**		1	R.H. DRIVE CARS—HOME AND EXPORT
5296	**Light Unit** (554813)	32—55	1	L.H. DRIVE—EXPORT EUROPE EXCEPT FRANCE
5295	**Bulb Adaptor** (554667)	32—56	1	
323	**Bulb** (323—12V/48W)		1	
306233	**FOG LAMP (55160D-L.576)**		1	L.H. DRIVE CARS — EXPORT FRANCE
5296	**Light Unit** (554813)	32—55	1	
5295	**Bulb Adaptor** (554667)	32—56	1	
638	**Bulb—Yellow** (600—12V/48W)		1	
304882	**LONG RANGE DRIVING LAMP (55132E-S.L.R.576)**		1	R.H. DRIVE CARS—HOME AND EXPORT
5297	**Light Unit** (554816)	32—57	1	L.H. DRIVE CARS—EXPORT EUROPE EXCEPT FRANCE
5295	**Bulb Adaptor** (554667)	32—58	1	
612	**Bulb** (185—12V/48W)		1	

ELECTRICAL EQUIPMENT

Part No.	Description	Plate No.	No. per Unit	Remarks
306234	**LONG RANGE DRIVING LAMP (55161D-S.L.R.576)**		1	L.H. DRIVE CARS—EXPORT FRANCE
5297	**Light Unit** (554816)	32—57	1	
5295	**Bulb Adaptor** (554667)	32—58	1	
638	**Bulb**—Yellow (600—12V/48W)		1	
308756	**SPEEDOMETER (0-140 M.P.H.)(SN.6321/00) INCORPORATING IGNITION AND MAIN BEAM WARNING LIGHTS**	32—59	1	R.H. DRIVE CARS—HOME AND EXPORT L.H. DRIVE CARS—EXPORT EXCEPT EUROPE
308757	**SPEEDOMETER (0-220 K.P.H.)(SN.6321/01) INCORPORATING IGNITION AND MAIN BEAM WARNING LIGHTS**		1	L.H. DRIVE CARS—EXPORT EUROPE
308777	**FLEXIBLE CABLE ASSEMBLY FOR SPEEDOMETER (DF.1302/01-4′ 6″)**	32—60	1	
308777/01	**Inner Cable Assembly**		1	
308777/02	**Outer Cable Assembly**		1	
21104/03	**Bolt**, securing Speedometer Cable to Gearbox		1	
430241/04	**Washer**, Spring, on Bolt		1	
432451	**Clip**, securing Speedometer Cable to Flywheel Housing		1	
22105/03	**Screw**, Set, securing Clip		1	
430241/03	**Washer**, Spring, on Screw		1	
432197	**Clip**, securing Speedometer Cable to Bulkhead		1	
423187/24	**Screw**, Set, securing Clip		1	
308758	**REVOLUTION COUNTER (0-6000 R.P.M.) INCORPORATING TWO FLASHER INDICATOR WARNING LIGHTS (RN.2410/00)**	32—61	1	
308006	**FLEXIBLE CABLE ASSEMBLY FOR REVOLUTION COUNTER (DF.1104/00-2′ 6″)**	32—62	1	
308006/01	**Inner Cable Assembly**		1	
308006/02	**Outer Cable Assembly**		1	

Part No.	Description	Plate No.	No. per Unit	Remarks
308517	**LIGHT LEADS FOR SPEEDOMETER AND REVOLUTION COUNTER ILLUMINATION (INCLUDING BULB HOLDERS AND BULBS) (54945586)**		2	
308751	**OIL WARNING LIGHT (GREEN) (54360259)**	32—63	1	
432839	**Designation Plate,** ' Engine Oil '		1	
308762	**AMMETER (36279 CZU.60)**	33—1	1	
987	**Bulb** (987—12V/2.2W)		1	
308917	**PETROL GAUGE (FG.2331/14)**	33—2	1	
308362	**PETROL TANK GAUGE UNIT (FT.5301/10)**	33—3	1	
C.937	**Cork Seating Washer,** for Petrol Tank Gauge Unit	33—4	1	
426934/22	**Screw,** Set, securing Petrol Tank Gauge Unit to Petrol Tank		6	
308759	**CLOCK (CE.2194/12)**	33—5	1	
308761	**TEMPERATURE GAUGE (TC.4304/04)**	33—6	1	
308080	**TEMPERATURE TRANSMITTER (TT.3800/00)**	33—7	1	

ELECTRICAL EQUIPMENT

Part No.	Description	Plate No.	No. per Unit	Remarks
309042	**STARTER, IGNITION AND ACCESSORIES SWITCH (31873-56.SA)**	33—8	1	
422500/08	Washer, for Starter Switch		1	
308816	**SWITCH LIGHTING (34342-57.SA)**	33—9	1	
308764	**SWITCH, WINDSCREEN WIPER (34337-79.SA)**	33—10	1	
C.22287	**SWITCH, OPERATING ELECTRIC WINDSCREEN WASHER (34280A-15.SA)**		1	Fitted to Chassis No. 136278 and subs. DR.450/1
431956	Designation Plate, " WASH " for Switch		1	
308817	**SWITCH PANEL LIGHT (34341-65.SA)**	33—11	1	
308817	**SWITCH FOR HEATER (34341-65.SA)**	33—11	1	**DQ.450/1 ONLY**
308817	**SWITCH FOR FRONT HEATER (34341-65.SA)**	33—11	1	**DR.450/1 ONLY**
83/638053	**SWITCH FOR REAR HEATER (PS.9-31685).**		2	
132443	**SWITCH BEZEL**	33—12	4	

Part No.	Description	Plate No.	No. per Unit	Remarks
431889	**DESIGNATION PLATE "HEATER"**		1	
431890	**DESIGNATION PLATE "WIPER"**		1	
431891	**DESIGNATION PLATE "LIGHTS"**		1	
431892	**DESIGNATION PLATE "PANEL"**		1	
308475	**Plate,** switch mounting		1	
87103/02	**Screw,** securing Plate		6	
309244	**CIGAR LIGHTER, ON FACIA (L15073-12V)**	33—13	1	
309244	**CIGAR LIGHTER, REAR COMPARTMENT (L15073-12V)**	33—13	2	DR.450/1 ONLY
C.15288	**Connector Blade** (Earth) for Cigar Lighter (54190107)		3	
C.18916	**Connector Blade** (Negative) for Cigar Lighter (199279)		3	
432009	**SWITCH, FOG LAMP (34285-PS.7)**	33—14	1	
431925/04	**Knob 'F,'** for Switch (5433319)	33—15	1	
432009	**SWITCH, LONG RANGE DRIVING LAMP (34285-PS.7)**	33—14	1	
431925/06	**Knob 'L,'** for Switch (5433318)	33—16	1	
431752	**Bracket,** Mounting Fog and Long Range Driving Lamp Switches		2	
87103/02	**Screw,** securing Mounting Brackets		8	

ELECTRICAL EQUIPMENT

Part No.	Description	Plate No.	No. per Unit	Remarks
308209	**SWITCH, FOR PETROL RESERVE (31696-56.SA)**		1	
308209/01	**Bulb,** for Warning Light in Switch (281-12V-1.2W Peanut)		1	
431983	**Designation Plate,** " PETROL RESERVE "		1	
432161	**Plate,** for Petrol Reserve Switch		1	
87103/02	**Woodscrew,** securing Switch Plate		4	
423199/6	**Washer,** on Woodscrews		4	
307759/12	**MIXTURE CONTROL (32616)**		1	
431925/03	**Knob, 'M,'** for Mixture Control (54660274)		1	
307759/11	**THROTTLE CONTROL (32617)**		1	
431925/02	**Knob 'T,'** for Throttle Control (54660275)		1	
C.12558	**INTERMEDIATE SPEED HOLD SWITCH (81047-HGS.)**		1	
C.19638	**Escutcheon Plate,** for Switch		1	
309035	**WARNING LIGHT (RED) FOR HYDRAULIC BRAKE FLUID LEVEL AND HANDBRAKE**	33—17	1	
432840	**Designation Plate,** " BRAKE FLUID—HANDBRAKE "	33—18	1	
309034	**SWITCH AND CAP ASSEMBLY FOR HYDRAULIC FLUID SUPPLY TANK (S.M.2/97)**	33—19	1	
309033	**SWITCH, OPERATING HANDBRAKE WARNING LIGHT**	33—20	1	
13204	**Locknut,** on Switch		2	

Part No.	Description	Plate No.	No. per Unit	Remarks
431429	**SWITCH, DIPPER (21.SA-31800)**	33—21	1	
426086/38	**Screw,** securing Dipper Switch		2	
431723	**SWITCH, OPERATING STOP LIGHT (31882-HL.2)**	33—22	1	
431438	**Gasket,** on Switch (378707)		1	
431132	**SWITCH, FOR INTERIOR LIGHTS (31378)**	33—23	2	**DQ.450/1 ONLY**
83/638053	**SWITCH, FOR INTERIOR LIGHTS (PS.9-31686)**		2	**DR.450/1 ONLY**
433191	**Switch Plate,** in Rear Quarter Cappings		2	
87100/2	**Screw,** Wood, securing Switch Plates		12	
309035	**WARNING LIGHT FOR REAR COMPARTMENT HEATER (54360886)**		1	Fitted at Chassis No. 136278 and subs. DR.450/1
C.20719	**Designation Plate,** 'HEATER' for Warning Light		1	
432009	**SWITCH, FOR ROOF LIGHT IN DRIVING COMPARTMENT (PS.7.34285)**		1	
431925/08	**Knob,** "D.L." on Roof Light Switch		1	
433190	**Support Plate,** mounting Switch		1	
426933/34	**Bolt,** securing Support Plate		2	
424935/4	**Nut,** on Bolts		2	
423199/2	**Washer,** Plain, on Bolts		4	
430241/03	**Washer,** Spring, under Nuts		2	
431741	**SWITCH, OPERATING COURTESY LIGHTS (SSB.04085/C)**	33—24	4	

ELECTRICAL EQUIPMENT

Part No.	Description	Plate No.	No. per Unit	Remarks
308374	**SWITCH, FOR REVERSE LIGHT (SS10-1-31824)**	33—25	1	
422508/28	**Lockwasher,** for Reverse Switch		1	
308374	**SWITCH, OPERATING SOLENOID CIRCUIT BREAKER (SS10-1-31824)**	33—25	1	
422508/28	**Lockwasher,** for Switch			
432049	**SWITCH, FOR OIL PRESSURE WARNING LIGHT (7954117)**	33—26	1	Alternative to Switch 432133
432133	**SWITCH, FOR OIL PRESSURE WARNING LIGHT (PS.5307/07)**	33—26	1	Alternative to Switch 432049
C.13991	**INTERMEDIATE SPEED HOLD SOLENOID (11S.76516A)**		1	Fitted from Chassis No. 136711 to 137010 DQ.450 and to all DQ.451
C.17673	**INTERMEDIATE SPEED HOLD SOLENOID (11S.76533A)**		1	Fitted to Chassis No. 137011 and subs. DQ.450 and to all DR.450/1
302801	**BATTERY (BT11A-24016437)**		1	
425154	**Screw,** securing Battery Lugs (186111)		2	
308702	**BATTERY CRADLE ASSEMBLY**		1	
342257	**Rubber,** for Battery Cradle		2	
432258/01	**Rubber,** for Battery Cradle		1	
432258/02	**Rubber,** for Battery Cradle		2	
432258/03	**Rubber,** for Battery Cradle		1	
432258/04	**Rubber,** for Battery Cradle		1	
12105/05	**Screw,** securing Battery Cradle to Boot Floor		4	
430241/05	**Washer,** Spring, on Screws		4	

Part No.	Description	Plate No.	No. per Unit	Remarks
308695	**ANGLE ASSEMBLY, SECURING BATTERY**		1	
422542/14	**Rod,** securing Battery		2	
13204	**Nut,** securing Rods		2	
83602	**Wing Nut,** on Rods		2	
422500/01	**Washer,** Plain, under Wing Nuts		2	
308698	**BATTERY CABLE, POSITIVE TO EARTH (54946698)**		1	
308699	**BATTERY CABLE, NEGATIVE TO SOLENOID (54945892)**		1	**DQ.450/1 ONLY**
309043	**BATTERY CABLE, NEGATIVE TO SOLENOID (54948738)**		1	**DR.450/1 ONLY**
308700	**CABLE, SOLENOID TO STARTER MOTOR (54946699)**		1	
425070	**EARTH CABLE, ENGINE TO BODY (822097)**		1	
422813	**EARTH CABLE, BODY TO CHASSIS (863598)**		1	
136464	**WINDSCREEN WIPER MOTOR (75417 A/D)**	33—27	1	**R.H. DRIVE CARS ONLY**
136465	**WINDSCREEN WIPER MOTOR (75416 A/D)**		1	**L.H. DRIVE CARS ONLY**

ELECTRICAL EQUIPMENT

Part No.	Description	Plate No.	No per Unit	Remarks
307820	**WHEELBOX ASSEMBLY FOR WIND-SCREEN WIPERS (72673/B)**	33—28	2	
9399	**Spindle and Gear** (743088)		2	
C.5522/2	**Rubber Tube,** for Spindle (740711)		2	
136076	**OUTER CASING, MOTOR TO WHEEL-BOX (54710655)**	33—29	1	
63/638022	**OUTER CASING, WHEELBOX TO WHEELBOX (745226)**	33—30	1	
C.5450	**OUTER CASING, WHEELBOX EX-TENSION (740746)**	33—31	1	
307819	**ARM FOR WINDSCREEN WIPER (54711557)**	33—32	2	**R.H. DRIVE CARS ONLY**
307821	**ARM FOR WINDSCREEN WIPER (54711558)**		2	**L.H. DRIVE CARS ONLY**
92/638001	**BLADE FOR WINDSCREEN WIPER ARMS (L.BOW-11") (737897)**	33—33	2	
51/638009	**GROMMET FOR OUTER CASING (763472)**		1	
96/635040	**BRACKET, FOR WINDSCREEN WIPER MOTOR**		1	
422544/10	**Screw,** Set, securing Bracket to Dash		2	
430241/03	**Washer,** Spring, on Setscrews		2	
12104/06	**Screw,** Set, securing Bracket to Dash		2	
13104	**Nut,** on Setscrews		2	
422500/01	**Washer,** Plain, under Nuts		2	
430241/04	**Washer,** Spring, under Nuts		2	

Part No.	Description	Plate No.	No. per Unit	Remarks
136153	**HORN (LOW NOTE) (WT.618-69046/F)**	33—34	1	
136154	**HORN (HIGH NOTE) (WT.618-69047/F)**	33—34	1	
8484	**Contact Set** (702687)		1	
8485	**Diaphragm** (Low Note) (702836)		1	
8486	**Diaphragm** (High Note) (702851)		1	
11104/06	**Bolt,** securing Horns		4	
13104	**Nut,** on Bolts		4	
430241/04	**Washer,** Spring, under Nuts		4	
432483	**Grommet,** for Horns (690939)		2	
136433	**INSTRUMENT PANEL HARNESS (54945887)**		1	
136363	**BODY HARNESS (54945583)**		1	**DQ.450/1 ONLY**
136766	**BODY HARNESS (54930877)**		1	**DR.450/1 ONLY**
136431	**FORWARD HARNESS (54945886)**		1	Fitted from Chassis No. 136711 to 137161 DQ.450 And to all DQ.451
136658	**FORWARD HARNESS (54949105)**		1	Fitted to Chassis No. 137162 and subs. DQ.450 And to all DR.450/1
136432	**BOOT HARNESS (54945890)**		1	**DQ.450/1 ONLY**
136767	**BOOT HARNESS (54930889)**		1	**DR.450/1 ONLY**

ELECTRICAL EQUIPMENT

Part No.	Description	Plate No.	No. per Unit	Remarks
C.22287	**WINDSCREEN WASHER HARNESS (54934326)**		1	Fitted at Chassis No. 136278 and subs. DR.450/1

ELECTRICAL CABLES

308516	**Cable,** for Petrol Gauge and Water Temperature Gauge Illumination (54945585)		2	
308517	**Cable,** for Speedometer and Revolution Indicator Illumination (54945586)		2	
308518	**Cable,** for Clock Illumination (54945880)		1	
309368	**Cable,** for Rear Compartment Heater Panel (54930874)		1	**DR.450/1 ONLY**
427605	**Cable,** for Boot Light (862850)		1	
431047	**Cable,** from R.H. Top Centre Pillar to L.H. Centre Pillar Light Switch (54941222)		2	
431041	**Cable,** from R.H. Top Centre Pillar to R.H. Door Switch (54941216)		2	
431045	**Cable,** from R.H. Front Door Switch to Forward Harness (54941220)		1	
431044	**Cable,** from Interior Light Switch to Earth (54941219)		1	
431126	**Cable,** R.H. for Flasher (54941671)		1	
431125	**Cable,** L.H. for Flasher (54941672)		1	
307793	**Cable,** for Horns (54941670)		1	
307742	**Cable,** 2-way, for Interior Lights (54941225)		1	
C.20767	**Cable,** from Facia Cigar Lighter to Earth (54932188)		1	
C.20769	**Cable,** from Rear Compartment R.H. Cigar Lighter to to Earth (54932186)		1	**DR.450/1 ONLY**
C.20768	**Cable,** from Rear Compartment L.H. Cigar Lighter to Earth (54932187)		1	
308737	**Cable,** for Petrol Tank Extension (54946700)		1	
308738	**Cable,** for Petrol Pump Extension (54946701)		1	
426846	**Cable,** for Long Range Driving Lamp (862276)		1	
426845	**Cable,** for Fog Lamp (862275)		1	
308860	**Cable,** for Steering Column Extension (54947116)		1	
309153	**Cable,** for Intermediate Gear Hold Solenoid (54948763)		1	Fitted from Chassis No. 136711 to 137161 DQ.450 And to all DQ.451
308701	**Cable,** H.T. from Coil to Distributor (54945893)		1	
C.22475	**Cable,** for Rear Heater Warning Light (54934329)		1	Fitted to Chassis No. 136278 and subs. DR.450/1.
309154	**Cable,** for Brake Fluid Level Indicator Warning Light (54949095)		1	Fitted from Chassis No. 136711 to 137161 DQ.450 And to all DQ.451
425156	**Sleeve,** for Headlamp Cables (822094)		2	
427860	**Sleeve,** for Boot Harness (863080)		1	

RUBBER GROMMETS

51/638009	**Grommet,** for Windscreen Wiper Casing, External (736472)		1	
423179/1	**Grommet,** for Side Lamp Wiring in Wing (859341)		2	
432483	**Grommet,** for Horn (690939)		2	
423179/2	**Grommet,** for Throttle Control—Mixture Control—Speedometer Cable—Revolution Counter Cable—Heater Control Cable—Fog and Long Range Driving Lamp Cables—Battery Positive Cable in Boot—Windscreen Washer Tubes (85905)		12	
432642	**Grommet,** for Battery Negative Cable in Boot (54941666)		1	
432643	**Grommet,** for Petrol Pipe in Boot (54941664)		1	
423179/1	**Grommet,** for Boot Light Cable in Boot Lid (859341)		3	
423179/4	**Grommet,** for Headlamp and Sidelamp Cables in Valance (859061)		2	

Part No.	Description	Plate No.	No. per Unit	Remarks
	CLIPS			
411480	**Clip,** securing Boot Harness to Boot Lid Hinge (187064)		1	
425109	**Clip,** securing Horn Cable to Front Cross Tube (850881)		3	
424700	**Clip,** securing Horn and Manette Cable to Steering Box (850276)		1	
401174	**Clip,** Bowden, securing Forward Harness junction under R.H. Side Dash		1	
408619	**Clip,** securing Battery Negative Cable to Wheelarch in Boot (187048)		1	
408619	**Clip,** securing Battery Solenoid Cable to Frame (187048)		4	5 off fitted to DR.450/1.
425456	**Clip,** securing Oil Pressure Warning Light Cable to Bulkhead		1	Fitted from Chassis No. 136711 to 137161 DQ.450 And to all DQ.451
406392	**Clip,** securing Oil Pressure Warning Light Cable to Servo Pipe		2	Fitted to Chassis No. 137162 and subs. DQ.450 And to all DR.450/1
406152	**Clip.** securing Thermostat Cable to Thermostat Body(L.3556-4)		1	
428753	**Clip,** securing Windscreen Wiper Cable to Motor Fixing Bolts and to Bulkhead (187052)		2	
404694	**Clip,** securing Cable on Rear of Windscreen Rail (1) Front Top R.H. Bulkhead (2) R.H. Valance (187051)		6	
C.1040/28	**Clip,** securing Cables at Rear of Windscreen Rail (187012)		1	
408618	**Clip,** securing Forward Harness to R.H. Dash Side Panel (187045)		1	
408619	**Clip,** securing Forward Harness to R.H. Top of Bulkhead (187048)		1	
426689	**Clip,** earthing Lamp to Valance (860015)		4	
424759	**Clip,** securing Solenoid Cable to L.H. Bulkhead (187004)		2	
427339	**Clip,** securing Dynamo Lead to Steering Column		1	
406152	**Clip,** securing Intermediate Gear Hold Cable to Brake Rod Lever Bracket on Frame		1	

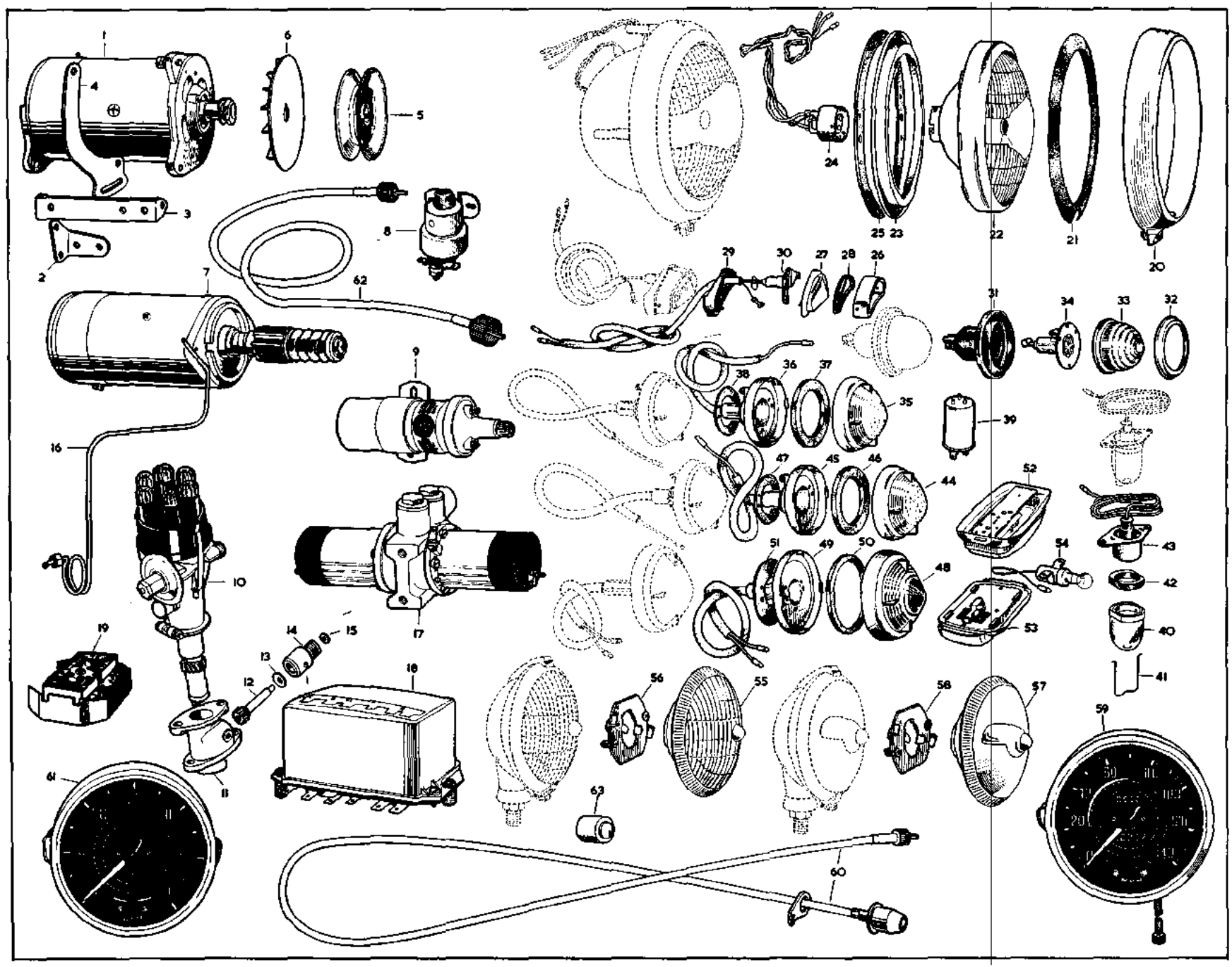
1
2
3
4
5
6
7
8
9
10
11
12
13
14
15
16
17
18
19
20
21
22
23
24
25
26
27
28
29
30
31
32
33
34
35
36
37
38
39
40
41
42
43
44
45
46
47
48
49
50
51
52
53
54
55
56
57
58
59
60
61
62
63

PLATE 32

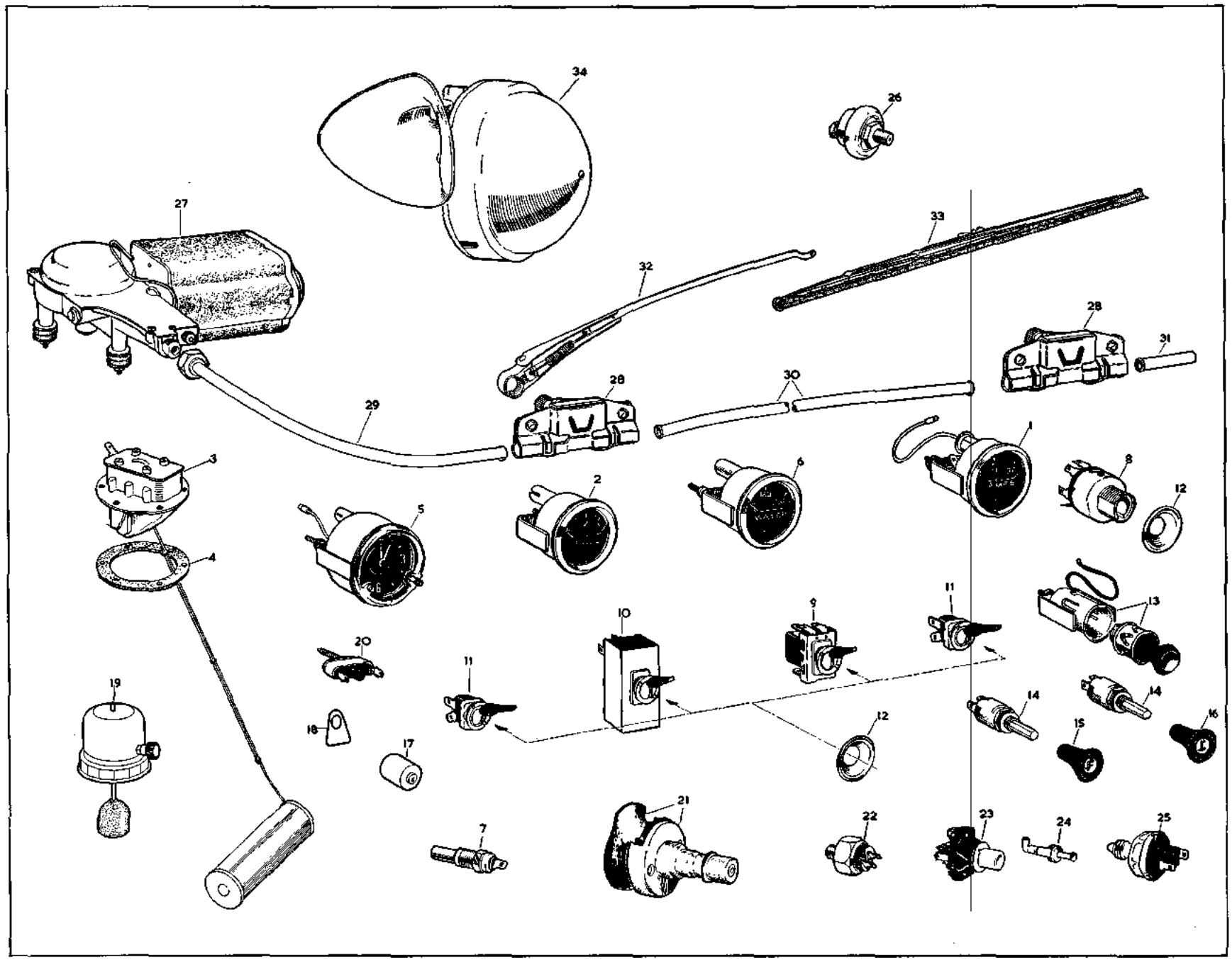
34
26
27
33
32
28
31
28
30
29
1
3
2
6
8
12
5
4
11
9
13
10
20
11
14
14
19
12
16
18
15
17
21
22
23
24
25
7

PLATE 33

DQ.450/1 ONLY

HEATER AND DEMISTER INSTALLATION

Part No.	Description	Plate No.	No per Unit	Remarks
134215	**HEATER UNIT (F.H.F.3503)**	34—1	1	
9944	**Radiator,** for Heater (SHF.7537)		1	
9945	**Clip,** securing Radiator (CH.67509)		1	
9946	**Seal,** on Radiator Outlet Pipe (CH.75207)		1	
9947	**Water Control Valve** (FHW.1211/20)		1	
9948	**Sealing Collar,** between Water Control Valve and Flange (CH.78116)		1	
9949	**Clip,** securing Cover (CH.67512)		4	
425506	**Seat Washer,** for Heater Unit Base (CHS.2100)	34—2	1	
304296	**Deflector Assembly,** for Heater (FHD.2202)	34—3	1	
12104/10	**Screw,** Set, securing Heater Unit to Dash		1	
12104/05	**Screw,** Set, securing Heater Unit to Dash		3	
422500/01	**Washer,** Plain, on Setscrews		2	
430241/04	**Washer,** Spring, on Setscrews		4	
308690	**PIPE, FROM CYLINDER HEAD WATER OUTLET TO INDUCTION MANIFOLD**	34—4	1	
308981	**FEED PIPE, FROM MANIFOLD PIPE TO HEATER**	34—5	1	
136572	**RETURN PIPE, FROM HEATER TO INDUCTION MANIFOLD PIPE**	34—6	1	
308692	**WATER PIPE FROM INDUCTION MANIFOLD TO WATER PUMP**	34—7	1	
432240	**HOSE, CONNECTING INDUCTION MANIFOLD PIPES**	34—8	4	
423176/08	**Clip,** securing Hoses	34—9	8	
422259	**HOSE, CONNECTING HEATER PIPES**	34—10	4	
422368	**Clip,** securing Hoses	34—11	8	

HEATER AND DEMISTER INSTALLATION

Part No.	Description	Plate No.	No. per Unit	Remarks
308284	**BLOWER UNIT (1-011-20-7102-9)**	34—12	1	
12104/10	Screw, Set, securing Blower Unit to Dash		1	
12104/05	Screw, Set, securing Blower Unit to Dash		3	
422500/01	Washer, Plain, on Setscrew		4	
430241/04	Washer, Spring, on Setscrew		4	
425627/02	**HOSE, CONNECTING BLOWER UNIT TO HEATER UNIT**	34—13	1	
431772	**HOSE, CONNECTING BLOWER UNIT TO PLENUM CHAMBER**	34—14	1	
308286	**ROTARY CONTROL, ON DASH, FOR HEATER (1-011-20-7102B)**	34—15	1	
308285	**ROTARY CONTROL, ON DASH, FOR DEMISTER (1-011-20-7102A)**	34—16	1	
309191/01	**CONTROL CABLE FOR HEATER (FHC.8124/72)**	34—17	1	
307191/02	**CONTROL CABLE FOR DEMISTER (FHC.8124/51)**	34—18	1	
431739	**OPERATING KNOB FOR HEATER CONTROL**	34—19	1	

DQ.450/1 ONLY

HEATER AND DEMISTER INSTALLATION

Part No.	Description	Plate No.	No. per Unit	Remarks
431738	**OPERATING KNOB FOR DEMISTER CONTROL**	34—20	1	
431740	**INDICATOR STUD, ON DASH, FOR HEATER AND DEMISTER ROTARY CONTROLS**		2	
308817	**SWITCH FOR HEATER (34341-65.SA)**	34—21	1	
431889	**Designation Plate,** ' HEATER ', for Switch	34—22	1	
63/635312	**HOSE FOR R.H. DEMISTER**	34—23	1	
63/635311	**HOSE FOR L.H. DEMISTER**	34—24	1	
423176/18	**Clip,** securing Demister Hoses	34—25	4	
370247	**DEMISTER DUCTS**	34—26	2	
87101-06	**Screw,** Wood, securing Ducts to Facia		4	

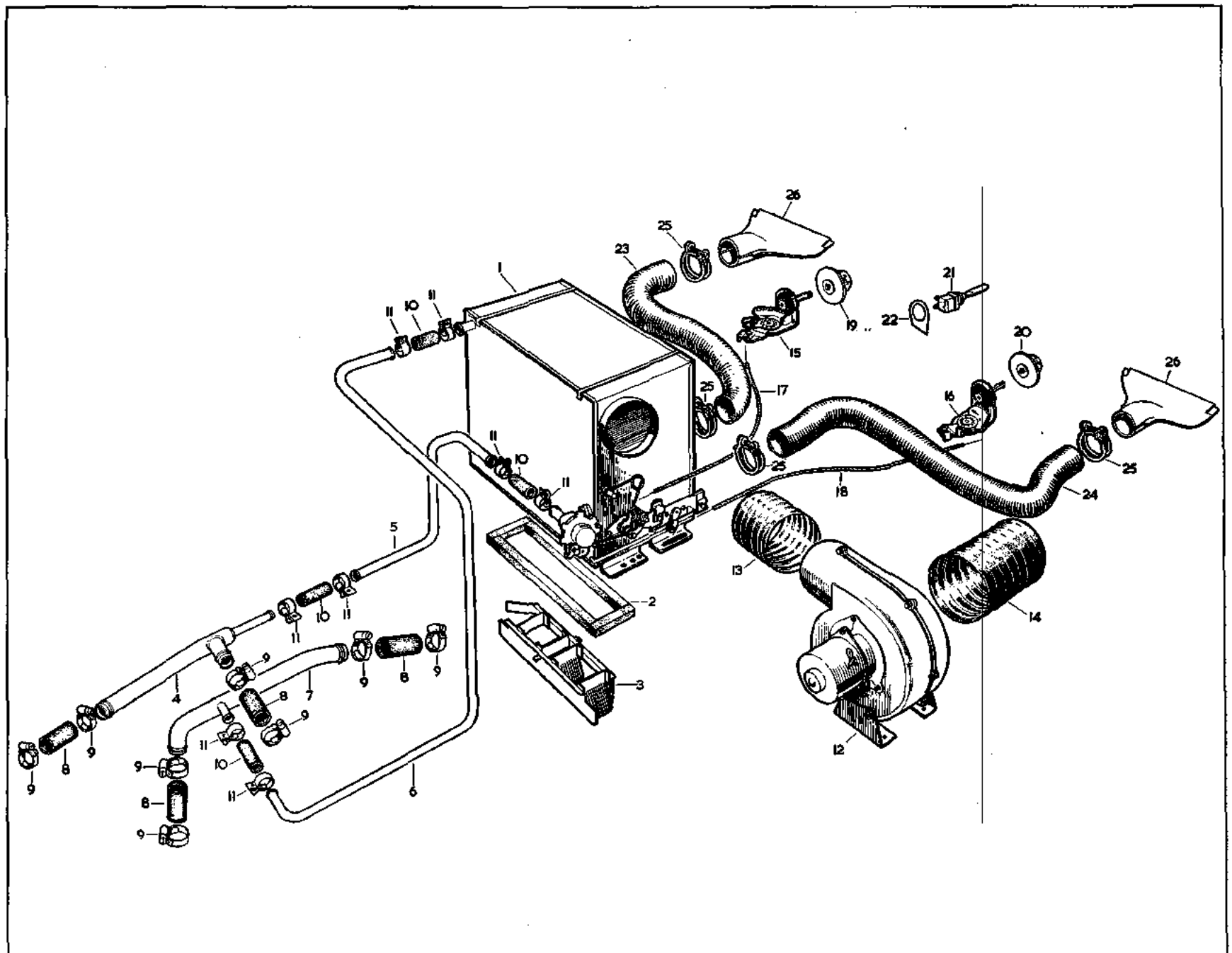

PLATE 34

HEATER AND DEMISTER INSTALLATION

Part No.	Description	Plate No.	No. per Unit	Remarks
134215	**FRONT HEATER UNIT (FHF.3503)**	35—1	1	
9944	**Radiator,** for Front Heater (SHF.7537)		1	
9945	**Clip,** securing Radiator (CH.67509)		1	
9946	**Seal,** on Radiator Outlet Pipe (CH.75207)		1	
9947	**Water Control Valve** (FHW.1211/20)		1	
9948	**Sealing Collar,** between Water Control Valve and Flange (CH.78116)		1	
9949	**Clip,** securing Cover (CH.67512)		4	
425506	**Seat Washer,** for Front Heater Unit (CHS.2100)	35—2	1	
304296	**Deflector Assembly,** for Front Heater Unit (FHD.2202)	35—3	1	
12104/10	**Screw,** Set, securing Heater Unit to Dash		1	
12104/05	**Screw,** Set, securing Heater Unit to Dash		3	
422500/01	**Washer,** Plain, on Setscrews		2	
430241/04	**Washer,** Spring, on Setscrews		4	
308284	**BLOWER UNIT (1-011-20-7102-9)**	35—4	1	
12104/10	**Screw,** Set, securing Blower Unit to Dash		1	
12104/05	**Screw,** Set, securing Blower Unit to Dash		3	
422500/01	**Washer,** Plain, on Setscrews		4	
430241/04	**Washer,** Spring, on Setscrews		4	
136753	**REAR HEATER UNIT (FHR.2325/04)**	35—5	1	
9950	**Motor,** for Rear Heater Unit (FHM.4432/01)		1	
9951	**Rotor,** for Rear Heater Unit (CH.71623)		1	
9955	**Gasket,** for Rotor (CH.75319)		1	
9952	**Radiator,** complete with Seals (SHF.7925)		1	
13104	**Nut,** securing Rear Heater Unit to Body		2	
422500/01	**Washer,** Plain, under Nuts		2	
430241/04	**Washer,** Spring, under Nuts		2	
433155	**Grommet,** in Body, sealing fixings (30-781-372)		2	
309345	**RUBBER COVER, FOR REAR HEATER UNIT MOTOR (CH.71203)**	35—6	1	
308690	**WATER PIPE, FROM CYLINDER HEAD WATER OUTLET TO INDUCTION MANIFOLD**	35—7	1	
309342	**FEED PIPE, FROM MANIFOLD PIPE TO FRONT HEATER**	35—8	1	

HEATER AND DEMISTER INSTALLATION

Part No.	Description	Plate No.	No. per Unit	Remarks
433153	HOSE, FROM FRONT HEATER FEED TO ISOLATING TAP	35—9	1	
83/638527	TAP, ISOLATING REAR HEATER (F.H.W.5220/03)	35—10	1	
433150	BRACKET, MOUNTING ISOLATING TAP ON DASH	35—11	1	
433152	HOSE, FROM ISOLATING TAP TO REAR HEATER	35—12	1	
433151	HOSE, FROM REAR HEATER TO FRONT HEATER RETURN	35—13	1	
422368	Clip, securing Hoses	35—14	6	
136751	RETURN, FROM FRONT HEATER TO INDUCTION MANIFOLD PIPE	35—15	1	
308692	WATER PIPE FROM INDUCTION MANIFOLD TO WATER PUMP	35—16	1	
432240	HOSE, CONNECTING INDUCTION MANIFOLD WATER PIPES	35—17	4	
C.2905/3	Clip, securing Hoses	35—18	8	

DR.450/1 ONLY

HEATER AND DEMISTER INSTALLATION

Part No.	Description	Plate No.	No. per Unit	Remarks
422259	**HOSE, CONNECTING HEATER PIPES**	35—19	4	
422368	Clip, securing Hoses	35—20	8	
425627/02	**HOSE, CONNECTING FRONT HEATER UNIT TO BLOWER UNIT**	35—21	1	
431772	**HOSE, CONNECTING BLOWER UNIT TO PLENUM CHAMBER**	35—22	1	
63/635312	**HOSE, CONNECTING FRONT HEATER UNIT TO R.H. DEMISTER DUCT**	35—23	1	
63/635311	**HOSE, CONNECTING FRONT HEATER UNIT TO L.H. DEMISTER DUCT**	35—24	1	
423176/18	Clip, securing Demister Hoses	35—25	4	
370247	**DEMISTER DUCTS**	35—26	2	
87101-06	Screw, Wood, securing Demister Ducts		4	
433158	**HOSE (R.H. LONG) CONNECTING REAR HEATER TO REAR COMPARTMENT R.H. AIR DUCT**	35—27	1	
433159	**HOSE (R.H. SHORT) CONNECTING REAR HEATER TO REAR COMPARTMENT R.H. AIR DUCT**	35—28	1	

HEATER AND DEMISTER INSTALLATION

Part No.	Description	Plate No.	No. per Unit	Remarks
433156	HOSE (L.H. LONG) CONNECTING REAR HEATER TO REAR COMPARTMENT L.H. AIR DUCT	35—29	1	
433157	HOSE (L.H. SHORT) CONNECTING REAR HEATER TO REAR COMPARTMENT L.H. AIR DUCT	35—30	1	
423176/16	Clip, securing Hoses	35—31	8	
370468	AIR DUCT FOR REAR COMPARTMENT AT BOTTOM OF DIVISION	35—32	2	
423175/29	Screw, securing Air Ducts		4	
470170	CHROME GRILLE ON AIR DUCTS	35—33	2	
470170	CHROME GRILLE ON FRONT SEAT HEELBOARD		2	
425281/18	Screw, securing Grilles		8	
308286	ROTARY CONTROL ON DASH, FOR FRONT HEATER (1-011-20-7102B)	35—34	1	
308285	ROTARY CONTROL, ON DASH, FOR DEMISTER (1-011-20-7102A)	35—35	1	

HEATER AND DEMISTER INSTALLATION

Part No.	Description	Plate No.	No. per Unit	Remarks
309191/01	**CONTROL CABLE FOR FRONT HEATER (FHC.8124/72)**	35—36	1	
309191/02	**CONTROL CABLE, FOR DEMISTER (FHC.8134/51)**	35—37	1	
431739	**OPERATING KNOB FOR FRONT HEATER CONTROL**	35—38	1	
431738	**OPERATING KNOB FOR DEMISTER CONTROL**	35—39	1	
431740	**INDICATOR STUD, ON DASH, FOR FRONT HEATER AND DEMISTER ROTARY CONTROLS**	35—40	2	
308817	**SWITCH ON DASH FOR FRONT HEATER (65.SA.34341)**	35—41	1	
431889	**Designation Plate,** ' HEATER ', for Switch	35—42	1	
83/638053	**SWITCH, ON REAR QUARTER WAIST CAPPINGS, FOR REAR HEATER FAN (31685-PS.9)**	35—43	2	
309035	**WARNING LIGHT ON L.H. REAR QUARTER WAIST CAPPING FOR REAR HEATER (54360886)**		1	Fitted at Chassis No. 136278 and subs.
C.20719	**Designation Plate,** ' HEATER ' for Warning Light		1	

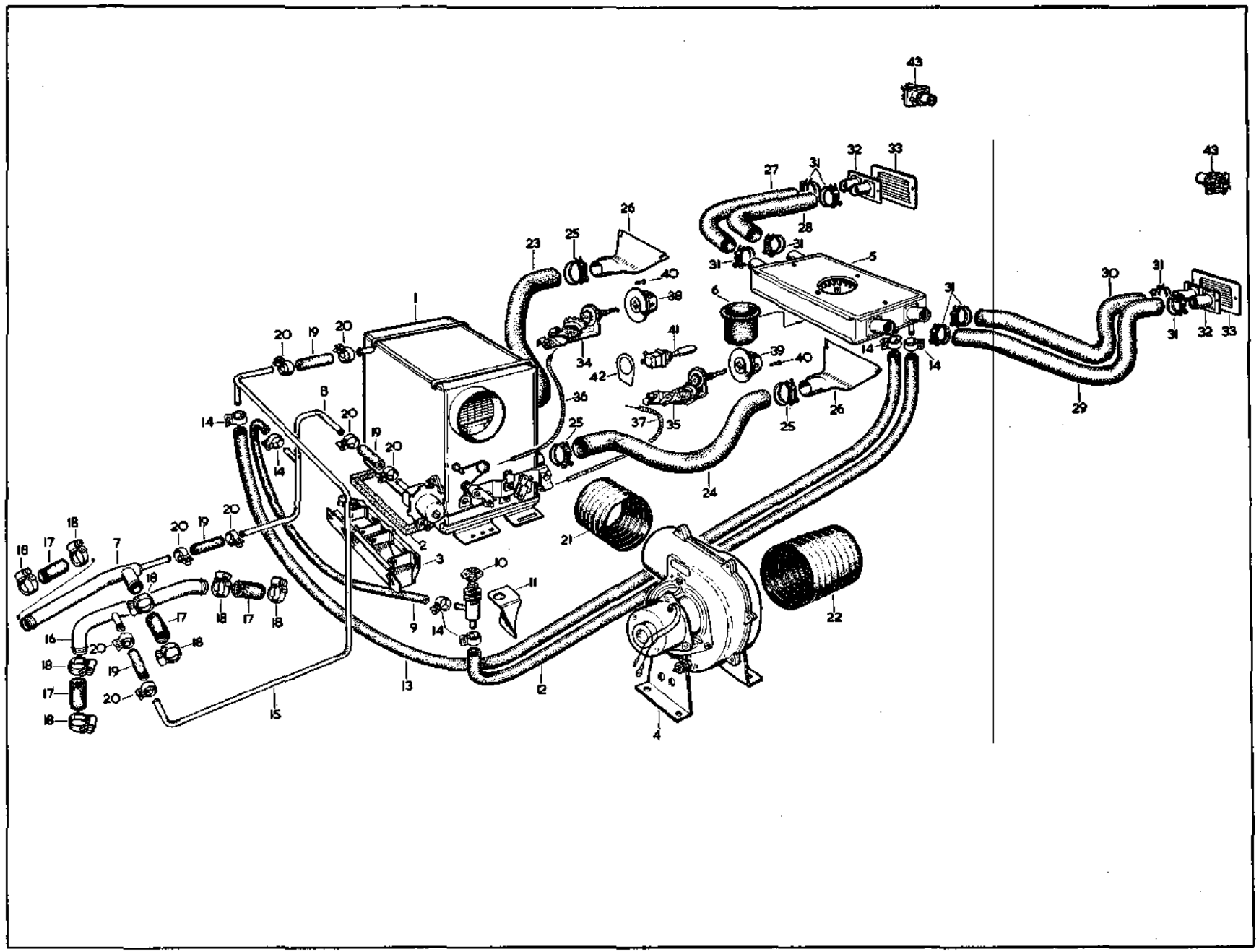
1
2
3
4
5
6
7
8
9
10
11
12
13
14
15
16
17
18
19
20
21
22
23
24
25
26
27
28
29
30
31
32
33
34
35
36
37
38
39
40
41
42
43

PLATE 35

WINDSCREEN WASHER

FITTED TO ALL DQ.450/1 AND TO DR.450/1 FROM CHASSIS No. 136011 TO 136277.

Part No.	Description	Plate No.	No. per Unit	Remarks
C.10127/1	**JAR, PUMP AND BRACKET ASSEMBLY (800051)**	36—1	1	
C.10127/2	**Jar only** (Glass)		1	
C.10127/3	**Pump and Cover Assembly**		1	
C.10127/5	**Bracket**		1	
C.10127/6	**Strainer Tube Assembly**		1	
426575	**Mounting Block,** for Reservoir		1	
422545/15	**Screw,** securing Bracket to Valance		1	
422543/2	**Nut,** on Screw		1	
430241/03	**Washer,** Spring, under Nut		1	
423187/24	**Screw,** securing Bracket to Valance		2	
	HOSE CONNECTIONS			
C.5596/2	**Hose,** from Brake Vacuum Servo Pipe to Control (81846 × 43″ long)	36—2	1	
136470/02	**Hose,** from Control to Pump (81846 × 100″ long)	36—3	1	
136470/01	**Hose,** from Pump to Tee Piece (820064 × 100″ long)	36—4	1	
134253/14	**Hose,** from Tee Piece to Jets (PF.15-882018 × 21″ long)	36—5	2	
432897	**Clip,** securing Hoses to Fan Cowl (187002)		2	
411480	**Clip,** securing Hoses to L.H. Valance (187064)		3	
423187/24	**Screw,** securing Clips		5	
C.5473/6	**TEE PIECE AT CONNECTION OF HOSES**	36—6	1	
C.5473/4	**JET ASSEMBLY, COMPLETE (800213)**	36—7	2	
C.5495	**Jet only**		2	
C.5499	**Knurled Button,** for Jet Cleaning (800217)		2	
C.5496	**Plastic Washer,** on Button (81635)		2	
C.5497	**Rubber Washer,** between Jets and Scuttle (735853)		2	
134253/06	**Plate Nut,** securing Jets to Scuttle		2	
135732/06	**CONTROL VALVE ASSEMBLY (900255)**	36—8	1	
431956	**Designation Plate** (" Wash ") for Control Valve	36—9	1	

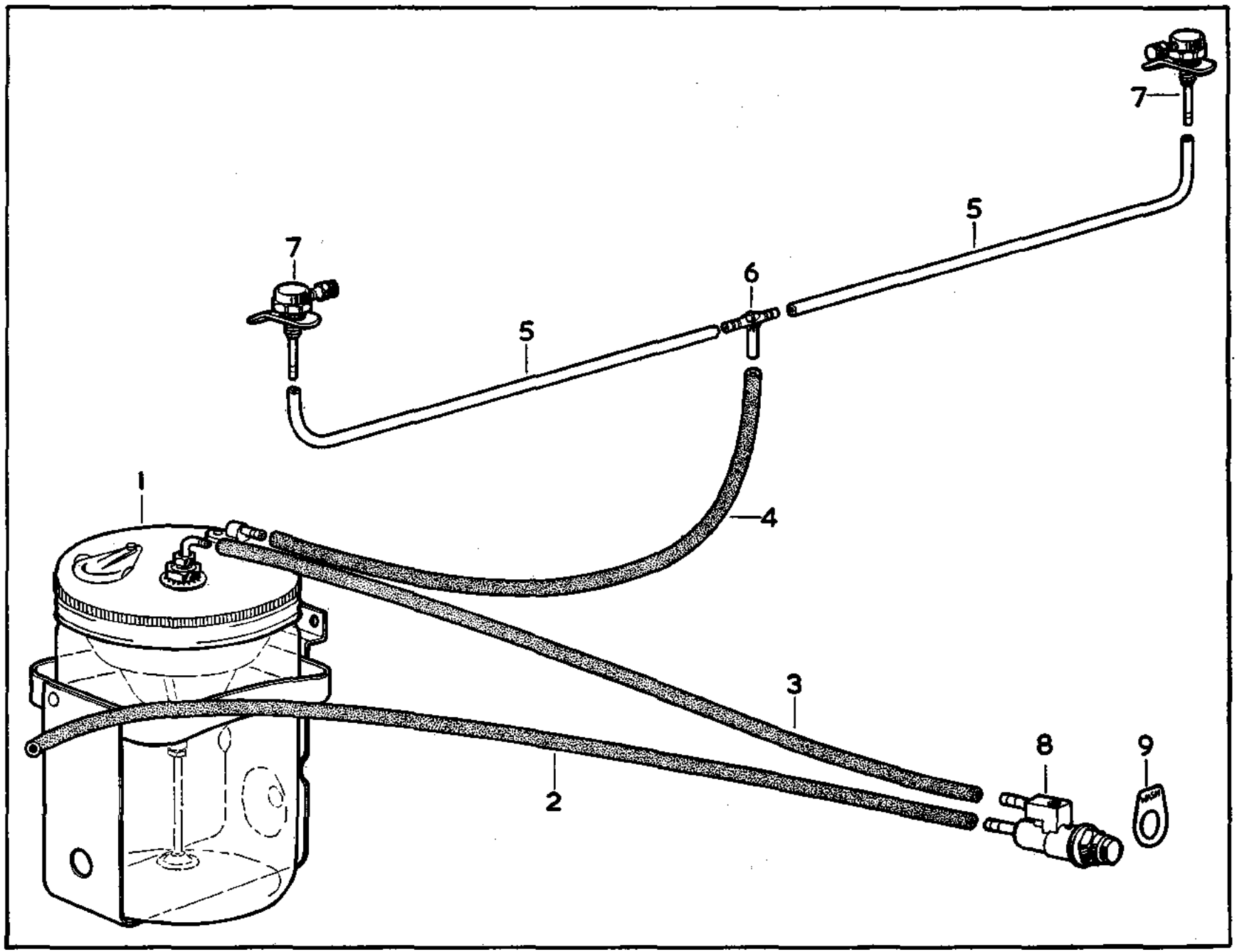

PLATE 36

DR.450/1 ONLY

WINDSCREEN WASHER

FITTED TO DR.450/1 AT CHASSIS No. 136278 AND SUBS.

Part No.	Description	Plate No.	No. per Unit	Remarks
C.17004	**WINDSCREEN WASHER UNIT (54071196)**		1	
8408	**Motor,** complete with Coupling (54711928)	37—1	1	
8035	**Pump Assembly** (295194)	37—2	1	
8036	**Moulded Cover** (295138)	37—3	1	
8037	**Rubber Gasket,** between Cover and Reservoir (295042)	37—4	1	
8038	**Rubber Filler Cap** (295043)	37—5	1	
8039	**Union,** securing Motor to Pump (54715154)	37—6	1	
8040	**Glass Reservoir** (295058)	37—7	1	
8041	**Bracket,** holding Reservoir (295061)	37—8	1	
426575	**Packing Piece,** between Bracket and Valance		2	
UFS.119/6R	**Screw,** Set, securing Bracket to Valance		2	
UFS.119/3R	**Screw,** Set, securing Bracket to Valance		1	
UFN.119/L	**Nut,** on Setscrews		3	
C.723/A	**Washer,** Shakeproof, under Nuts		3	
8408	**MOTOR, COMPLETE WITH COUPLING (54711928)**	37—1	1	
8042	**Contact Assembly** (295251)		1	
8043	**Brush Set** (295198)		1	
8044	**Armature** (295023)		1	
8990	**Lucar Connector** (54190172)		3	
C.19402	**TUBING FOR WINDSCREEN WASHER (116" LONG) (54713823)**	37—9	1	
C.15644	**'T' PIECE AT JUNCTION OF FLUID TUBES (295115)**	37—10	1	
C.15645	**JET ASSEMBLY (54711657)**	37—11	2	

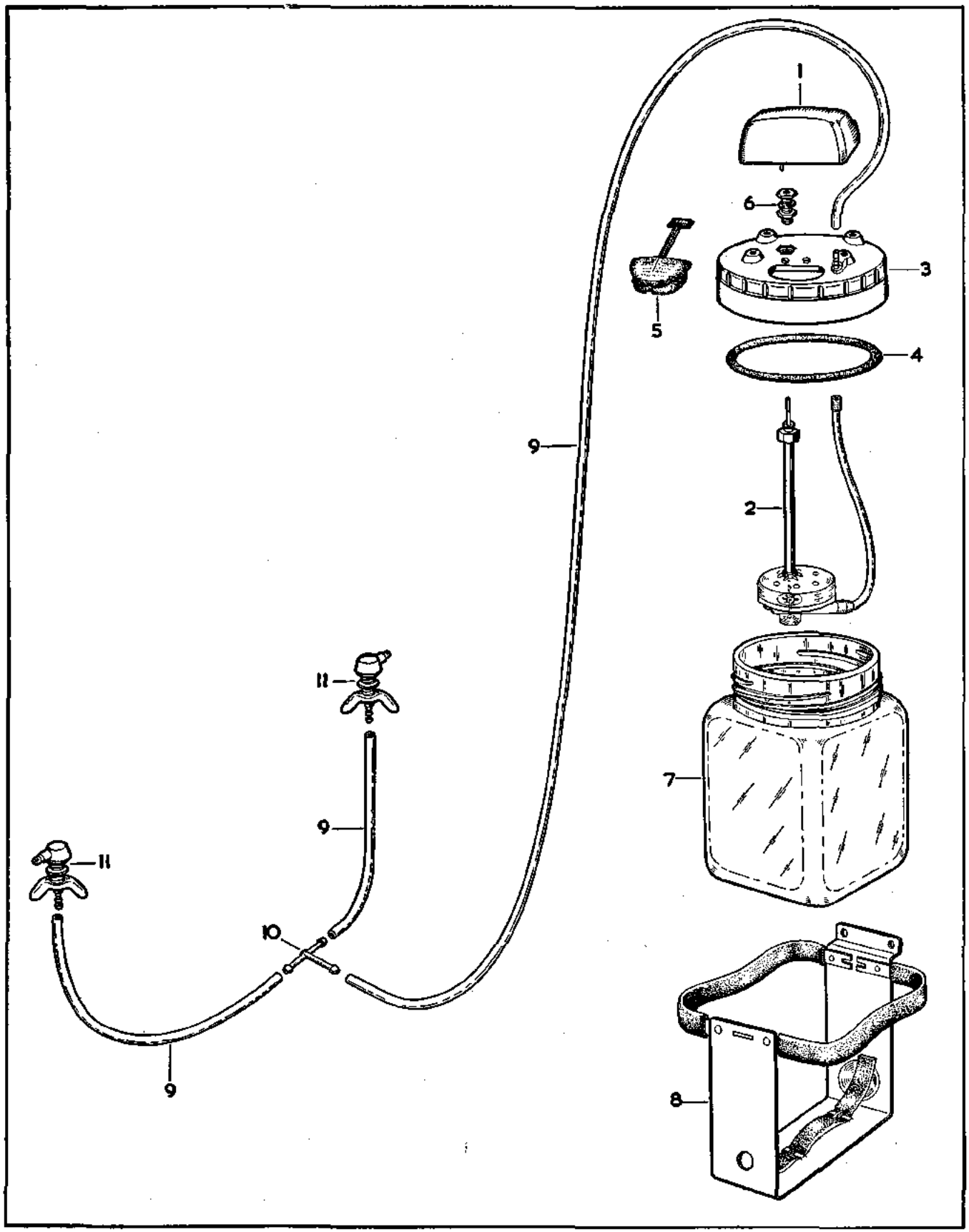

PLATE 37

TOOL KIT

Part No.	Description	Plate No.	No. per Unit	Remarks
424754	**Spanner Open Ended,** $\frac{3}{8}''$ × $\frac{5}{16}''$ A.F.		1	
424755	**Spanner Open Ended,** $\frac{7}{16}''$ × $\frac{1}{2}''$ A.F.		1	
303793	**Spanner Open Ended,** $\frac{9}{16}''$ × $\frac{5}{8}''$ A.F.		1	
303794	**Spanner Open Ended,** $\frac{11}{16}''$ × $\frac{3}{4}''$ A.F.		1	
303795	**Spanner Open Ended,** $\frac{3}{4}''$ × $\frac{15}{16}''$ A.F.		1	
303787	**Box Spanner,** $\frac{1}{2}''$ × $\frac{9}{16}''$ A.F.		1	
303788	**Box Spanner,** $\frac{11}{16}''$ × $\frac{3}{4}''$ A.F.		1	
C.21887	**Box Spanner,** for Sparking Plugs		1	
303789	**Tommy Bar,** for Box Spanners		1	
264185	**Spanner,** for Hub Cap		1	
418259	**Pliers**		1	
308011	**Screwdriver**		1	
426071	**Screwdriver and Point Gauge**		1	
418257	**File,** for Contact Breaker Points		1	
431490	**Gauge,** for Tappets		1	
425706	**Hub Cap Remover**		1	
303101	**Wheel Brace**		1	
135172	**Lifting Jack**		1	
431050	**Bleed Tube**		1	
309123	**Extractor,** for Spare Wheel		1	
134311	**Tool Roll**		1	